CHEM-BIO DEFENSE

Vol. 8 No. 2

Animal Model Research Achieves FDA Qualification Milestone

Honoring Those Who Serve

2011 USAR Red Dragon Exercise

Front Cover: The Joint Program Executive Office for Chemical and Biological Defense (JPEO-CBD) is the single focal point for research, development, acquisition, fielding, and life-cycle support of chemical, biological, radiological, and nuclear defense equipment and medical countermeasures for the Joint Services. The JPEO-CBD is comprised of eight Joint Project Management Offices located throughout the United States. These offices leverage talent and expertise from across the Services while partnering with other Federal agencies, Academia, and Industry to provide the best chemical, biological, radiological, and nuclear defense technology, equipment, and medical countermeasures to the Warfighter and the Nation.

We salute our most important stakeholders - the men and women of the U.S. Armed Forces - for always answering the call to duty with remarkable courage, dedication, and unshakable resolve. (Service Birthdays: United States Army - June 14, 1775; United States Marine Corps - November 10, 1775; United States Navy - October 13, 1778; United States Coast Guard - August 4, 1790; Unites States Air Force - September 18, 1947)

CONTENTS

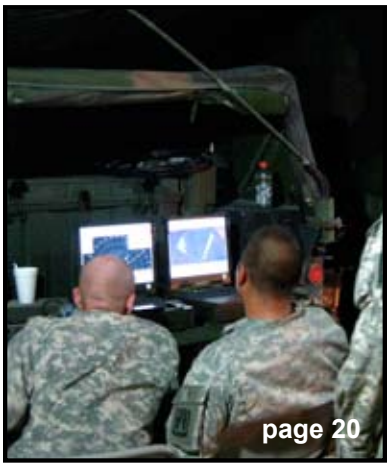

5 Introducing: Joint Project Manager - Protection

6 Force Protection Equipment Demonstration VIII: State of the Art Security Expo

9 Joint Project Manager - Transformational Medical Technologies Animal Model Research Achieves FDA Qualification Milestone

12 PD-TESS Test Grid: Updating Chemical and Biological Defense Capabilities by Improving System Test and Evaluation

16 Honoring Those Who Serve

18 U.S. Army 20th Support Command (CBRNE): Ready for the Challenge

20 Joint Project Manager - Biological Defense: Red Dragon 2011

22 Supporting the Warfighter with Biodefense Vaccines

24 Physical Interfaces in the Common Chemical Biological Radiological and Nuclear Sensor Interface

28 Photo Spotlight

30 Improving Reliability of Chemical Agent Shipboard Detection

Mr. Mike Abale
Navy

Col Deanna C. Won
USAF

COL Charles Millard
USA

COL Brett Barraclough
USA

Mr. Scott White
USN

COL Daniel McCormick
USA

Mr. William Hartzell
USMC

Mr. David Hough
USMC

Joint Program Executive Office

Brig. Gen. Jess A. Scarbrough
Joint Program Executive Officer

Mr. Douglas Bryce
Deputy Joint Program Executive Officer

Mr. Scott Paris
Chief of Staff

Master Sgt. Charles Nuce
Senior Enlisted Advisor

Mrs. Neicea Mallon
Director, Knowledge Management

Ms. Karan Williams
Director, Resource Management

Mr. Curt Wilhide
Director, Program Assistance & Program Assessment

Mr. Dave Ferris
Director, Policy, Standards, & Integration

Ms. Emma Wilson
Director, Strategic Concepts & Technology

Mr. Darrell McCarthy
Director, Human Capital Management

Ms. Patricia Estep
Webmaster
webmaster@jpeocbd.osd.mil

Chem-Bio Defense Magazine Staff

Ms. Cicely Levingston
Editor
Chief, Strategic Communications
cicely.r.levingston.civ@mail.mil

Mr. Steven Lusher
Media Alignment & Communications
steven.y.lusher.civ@mail.mil

Ms. Suzanne Kenney
Senior Graphic Designer
suzanne.b.kenney.ctr@mail.mil

Mr. Marc R. Lester
Graphic Designer
marc.r.lester.ctr@mail.mil

Ms. Jacqueline Grosser
Distribution
jacquiline.m.grosser.ctr@mail.mil

Special Recognition:

Vincent Auber
Christopher Businsky
Breena Berte
Spencer Chambers
Trinita Coefield
Dottie McDowney
Arlene Goyette
John Haigis
Lauren Ishmael
Tabitha Keese
Kristin Stassi
Mike Visotsky

Chem-Bio Defense Magazine is published by the Joint Program Executive Office for Chemical and Biological Defense. Articles reflect the views of the authors and do not necessarily represent the views of Chem-Bio Defense, the Department of the Army, or the Department of Defense.

The Editor's Desk

Cicely Levingston

The Joint Program Executive Office for Chemical and Biological Defense (JPEO-CBD) experienced great change in 2011. The organization transitioned from offices in Falls Church, VA to the Department of Defense (DoD) Chemical, Biological, Radiological, Nuclear, and Explosive (CBRNE) Center of Excellence on the Edgewood Area of Aberdeen Proving Ground, MD. This transition, mandated by the 2005 Base Realignment and Closure Commission, allows the JPEO-CBD to more efficiently accomplish our mission of providing CBRN defense equipment, medical countermeasures, and installation force protection integrated capabilities in support of the national strategies. Obtaining increased efficiencies has never been more relevant than in our current fiscally constrained environment.

The *Chem-Bio Defense* magazine strives to effectively bridge the world-class professionals who work to accomplish the JPEO-CBD's mission with our valued stakeholders. The following pages highlight the military, government civilian, and contract personnel within our eight joint project management offices who provide critical CBRN countermeasures to our Warfighters, our Nation, and the world. From the test and evaluation improvements accomplished within the Joint Project Manager for NBC Contamination Avoidance (page 12) to the biodefense vaccines provided by the Joint Project Manager for Chemical Biological Medical Systems (page 22), it remains clear that the JPEO-CBD is a critical component in the DoD's comprehensive national strategy to counter the CBRN threat.

Change within the JPEO-CBD did not end with our relocation. The Strategic Communications Team has made it even easier for you to follow the great work underway within our organization. You can now:

- View and download the magazine at http://issuu.com/jpeo-cbd
- "Like" us on facebook (JPEO-CBD)
- Follow us on Twitter (@JPEOCBD)
- Connect with us on LinkedIn (JPEOCBD)

The new year brings new opportunities to reach our stakeholders. Please share this magazine with others, and don't hesitate to contact me should you have any comments or suggestions. I look forward to hearing from you.

Cicely R. Levingston

Cicely R. Levingston
Editor

Introducing the new Joint Project Management Office for Protection!

The Joint Project Management Office for Protection (JPM-P) was formed from the consolidation of three existing Joint Project Management Offices: 1) Individual Protection, 2) Collective Protection, and 3) Decontamination. Newly developed JPM – P is the Major Defense Acquisition Program leader or "Trail Boss" responsible for integrating Chemical, Biological, Radiological and Nuclear survivability across the Department of Defense.

Mission

Develop, field, and sustain CBRN protection and hazard mitigation capabilities for the nation

Vision

Promote a creative and innovative workforce focused on acquiring capability to defend the nation against CBRN threats

For more information, please visit JPM-P at www.jpeocbd.osd.mil

By: Mr. Jon Moneyhun, Mr. Bob Brletich, Mr. James Suarez & Ms. Deborah Vel
Joint Project Manager – Guardian

Force Protection Equipment Demonstration VIII: State of the Art Security Expo

Attempted terrorist attacks against forward deployed US and Allied forces in theater and at CONUS and OCONUS installations have increased significantly since the 1996 Khobar Towers bombing.

Today, we are faced with increasingly sophisticated threats from technologically adept adversaries utilizing improvised explosive devices (IEDs), car bombs, explosives aboard commercial cargo and passenger aircraft, suicide bombers, and direct small-arms assaults. At the same time, we are faced with a resource-constrained environment forcing Commands and Agencies at all levels to do more with less.

The Force Protection Equipment Demonstration (FPED) allows the Department of Defense (DoD) and other government agencies to identify promising technologies that enhance force protection while reducing manpower requirements and cost. FPED VIII was conducted May 17 – 19, 2011 at the Stafford Regional Airport, Stafford, VA, 50 miles south of the Pentagon. FPED VIII hosted over 570 domestic and

international security manufacturers displaying more than 3,100 physical security/force protection items of equipment bringing them together with security and force protection experts from the DoD as well as federal, state and local law enforcement and security agencies. The FPED VIII provided force protection users the opportunity to see and interact with equipment and vendors.

The FPED is sponsored and funded by the DoD Physical Security Equipment Action Group (PSEAG) under the Office of the Assistant to the Secretary of Defense for Nuclear and Chemical and Biological Defense Programs/Nuclear Matters. Contributing sponsors for the 2011 demonstration included the Department of Energy and the DoD's Technical Support Working Group. The US Army Product Manager, Force Protection Systems (PM-FPS), under Joint Project Manager Guardian, planned, coordinated and executed the event under the guidance of the DoD PSEAG Chairman. Despite heavy rain, mud, and flooding, the demonstration attracted the most participants ever. The FPED "Mini-City" was constructed almost overnight at Stafford Regional Airport with less than 100 dedicated staff members. A total of over 6,340 linear feet of tentage, with power generation equipment, covering over 138,000 square feet was set up over a five day period (May 9-13, 2011), with vendors moving in during May 14-16, 2011.

Aerial view of FPED VIII demonstration area

Over 350 tons of vendor equipment were shipped to the demonstration area and organized into 20 functional equipment categories. Equipment categories were based on identified needs and what is currently under development by the DoD, the Services, and other government agencies working towards force protection solutions.

A total of 135,000 square feet of operational area was established to allow attendees to interact with vendors and their products.

One of FPED's many additional benefits is the value-added by the "cross-fertilization" of vendors and attendees discussing requirements and matching them to capability gaps and users' real world experiences. The FPED requires vendors to be able to deliver a product within 90 days of demonstration completion. A 120-day post event survey identified over

$170 million in contracts that were awarded as a result of FPED VIII. For example, PM-FPS purchased five high energy gamma trailer vehicle non-intrusive inspection systems that were displayed at FPED VIII to meet a Rapid Equipping Force "Ten Liner" from theater. Additionally, the Stafford County Office of Economic Development estimated that over $6 million in revenue was generated for the local economy.

As future threats emerge, the need for new and improved force protection and physical security systems and equipment continues to expand. Advances in robotics, enhanced communications, sensor technology and a growing list of counterterrorism applications for nanotechnology are examples of how industry continues to push for solutions. At the same time, IEDs are now made with more sophisticated equipment through the use of advanced technology, such as cell phones, digital clocks, and watches. These IEDs are now being hidden in underwear, sneakers, and a range of other places including body cavities. The chase continues and FPED provides industry and government agencies the opportunity to come together to meet those challenges with easily integratable, affordable, available, and user friendly equipment.

In an increasingly dangerous time in our nation's history, FPED has become the premier physical security and force protection source of information. The FPED provides the acquisition community with market research and surveillance for physical security and force protection equipment. Attendees receives a CD cataloging all demonstrated items of equipment. The CD contains product descriptions, specifications, pictures, plus cost and vendor contact information. This user-friendly CD can be sorted by product category, keyword, and vendor. It also includes a short video clip highlighting the overall demonstration, venue, and theme. A copy of the FPED VIII CD can be requested by calling the PM – FPS office at (703)-704-1416.

Planning is currently underway by the FPED team for the next demonstration to be held in the Spring of 2013. Information will be provided via the FPED IX website as it becomes available. All government security experts should plan to attend this important event.

Heavy equipment being placed on the venue

Vehicle Barrier Demonstration

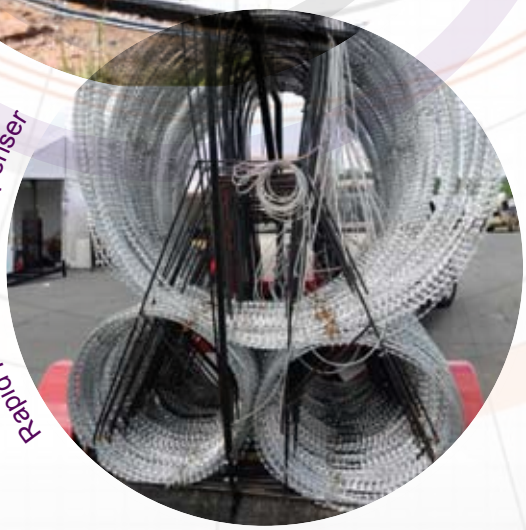
Rapid Razor Wire Dispenser

Brig. Gen. Scarbrough (far right), JPEO-CBD, and Mr. Tom Whittle (far left), the DoD PSEAG acting chair, discuss demonstrations with other FPEDVIII attendees.

Protecting the **Warfighter** *from* **Biological Threats**

JPM-TMT-Sponsored Animal Model Reaches Milestone Toward FDA Qualification

By: Michael Bailey
Deputy Director, Strategic Concepts and Technologies
Joint Project Manager – Transformational Medical Technologies

The Joint Project Manager Transformational Medical Technologies (JPM-TMT) program is working to find the most efficient and beneficial solution to a very difficult problem: developing an animal model as a test system for use in development of medical countermeasures (MCM) or drugs against biothreats.

Licensure of MCM by the U.S. Food and Drug Administration (FDA) comes only after thorough testing in animals and humans. However, the traditional path to FDA licensure for MCM against biothreats like the hemorrhagic fever caused by Ebola virus is not applicable. In this example, natural outbreaks of Ebola are too rare to allow MCM evaluation in humans. The FDA's "Animal Rule" (the possibility of drug approval based on testing in qualified animal models) is an alternate route for demonstrating safety and effectiveness of new drugs when human efficacy/clinical studies are neither ethical nor feasible. However, developing new MCM using the Animal Rule is a novel and difficult process. Major hurdles exist—from application of the Animal Rule to the lack of qualified animal models—so there is very little prior experience to call upon.

Fortunately, a project sponsored by JPM-TMT to develop an animal model recently reached a significant milestone with the FDA's Office of Counter-Terrorism and Emergency Coordination (OCTEC), the organization leading the FDA's new animal model qualification process. The JPM-TMT-sponsored project has generated the amount of data required for OCTEC consideration en-route to FDA qualification studies. The data, based on a non-human primate model infected with aerosolized Ebola virus, was assembled into a package and submitted to OCTEC for review, comment, and subsequent expedited refinement. While other animal models exist at the laboratory testing phase, they are not yet suitable for use in the pivotal studies required for licensure using the Animal Rule. The JPM-TMT-sponsored project is the first animal model system to arrive at the threshold of possible qualification by the FDA.

While other animal models exist at the laboratory testing level, this is the first animal model system to arrive at the threshold of possible qualification by the FDA.

*An **animal model** is a living animal used instead of a human during the research and investigation of a human disease. An animal model must mimic the disease as it occurs in humans, is used to better understand the disease, and is essential to demonstrate drug safety and effectiveness without endangering humans.*

According to Joint Project Manager David E. Hough, "Protecting our Warfighters from biological threats is JPM-TMT's number one priority. Advanced development of MCM and the progress of getting this animal model to OCTEC puts us one step closer."

JPM-TMT works closely with technical and program staff at the United States Army Institute of Infectious Diseases (USAMRIID) as they develop animal models and supporting technologies such as aerosol delivery and characterization systems. When projects are mature enough that a submission to OCTEC is warranted, JPM-TMT and USAMRIID staff work with experts from the United States Army Medical Materiel Development Activity (USAMMDA) to develop the reports necessary to interact with the FDA and solicit the feedback necessary to refine the model systems to ensure suitability for use by MCM developers.

The JPM-TMT's recent feat is a welcomed event. Instead of having the FDA review animal model systems only when MCM developers are on the verge of starting the most important studies the FDA will now review and qualify animal models at a much earlier stage in the drug development process. This will enable animal model developers to refine their model systems well in advance of when the systems will be needed for test and evaluation (T&E).

If approved, the JPM-TMT-sponsored animal model will ultimately be used in the T&E phase of anti-Ebola virus MCM—a critical element of the U.S. DoD's acquisitions process of delivering novel technologies to protect our Warfighters from biothreats. Within the JPEO-CBD, other Joint Project Managers (JPM) can also benefit from JPM-TMT's animal model efforts. For example, when JPM-TMT develops animal models for the testing of hemorrhagic fever virus (HFV) therapeutics, there is potential for the data supporting these models to serve as an advanced starting point for JPMs that are developing other MCMs such as vaccines.

"Protecting our Warfighters from biological threats is JPM-TMT's number one priority. Advanced development of MCM and the progress of getting this animal model to OCTEC puts us one step closer."

David E. Hough
Joint Project Manager of JPM-TMT

The JPM-TMT's effort has value to other programs within the DoD as well as other federal departments. Through JPM-TMT's involvement with the Filovirus Animal Nonclinical Group ("FANG")—a working group with representation from the FDA, JPMs within the JPEO-CBD, other DoD organizations and government agencies who are also developing MCM—projects are planned collaboratively to ensure that the dollars spent by one group ultimately benefit many other groups, increasing the chances of success for model system developers and MCM developers. The collective efforts of JPM-TMT, JPEO-CBD, and other DoD organizations and government agencies will someday yield therapeutics and vaccines against fatal HFVs such as Ebola, Marburg, and Lassa to protect our Warfighters who may encounter these agents either on the battlefield or in areas of the world where natural outbreaks occur. Until then, there is still much work to do, and JPM-TMT is committed to achieving even more milestones. More information about this effort and other endeavors by JPM-TMT to protect our warfighters from emerging, genetically altered and unknown biothreats, can be fount at **www.jpmtmt.mil**.

New name... new website... new opportunities!

We're Live! www.jpmtmt.mil

JPM-TMT has moved to a new website address.
Add and bookmark the link now and visit the site often for updates.

The new site offers a fresh user-friendly experience and impactful presentation of information.

The site features:

- Program news prominently featured
- Streamlined design making searching simple
- Comprehensive resource center
- Easy-to-find funding opportunities
- Sleek social media capability
- Interactive events calendar

Also follow us on:

PD-TESS Test Grid

By: Mr. Mahdee McNeil, Computer Engineer, Test Grid Team
Joint Project Manager – Nuclear Biological Chemical Contamination Avoidance

Updating Chemical and Biological Defense Capabilities by Improving System Test and Evaluation

Providing chemical and biological defense capabilities to the Warfighter is an everyday concern for the Product Director - Test, Equipment, Strategy, and Support (PD-TESS) within the JPEO-CBD's Joint Project Management Office for Nuclear Biological Chemical Contamination Avoidance. The PD-TESS supports Department of Defense (DoD) Joint Project Managers as well as the test and evaluation community with the development of capabilities to adequately test and evaluate chemical, biological, radiological, and nuclear (CBRN) defense systems. This mission is particularly challenging amid rapidly changing technology. The JPEO-CBD does not tackle this task alone. Testing CBRN defense systems in a simulant field environment predominantly takes place at Dugway Proving Ground (DPG), UT and can present unique and difficult challenges. The PD-TESS team, along with representatives from DPG; West Desert Test Center (WDTC); and Lockheed Martin's Test Grid Contractor Team (ITT Industries), were tasked in 2011 to fully upgrade the chemical and biological testing environment at DPG. This project was

known as the PD-TESS Test Grid.

The DPG is a multi-purpose range and testing facility that allows for performance testing of chemical and biological defense equipment. The WDTC provides the DoD with the opportunity to conduct outdoor testing of chemical and biological simulants that have similar characteristics of live agents but are much safer.

The objective of the PD-TESS Test Grid Program is to design, install, and build a fully integrated chemical and biological test grid, which is a 20 km X 40 km range area of DPG.

Upgrades are underway and some are ready for use. The updated Test Grid will allow WDTC to conduct simulant testing of various defensive instruments for chemical and biological warfare agents. Additionally, the upgrades will allow an improved ability to move large volumes of instrument measurement data from the Test Grid site to a secured data center in near real-time. This wireless, encrypted information is sent across the network and then saved to a central location, where the instruments can be remotely monitored and manipulated.

The PD-TESS Test Grid program implemented multi-band radios that operate within designated frequencies that are separate from any other system at DPG. This distinction eliminates interference from other wireless systems on DPG. A physical hard line data transferring infrastructure that uses a fiber optic network was also incorporated into the Test Grid to assist the wireless network if needed, allowing for rapid troubleshooting and repair to the system with minimum delay to any testing.

The PD-TESS Test Grid program was separately divided into specific tasks referred to as Engineering Assignments (EAs). Different sets of Roadmap Requirements (RMRs) were developed within each EA and served as performance objectives for the progress of the program The RMRs also provided quantitative performance goals for important parameters that determined the performance of the overall system. Each individual assessment was strategically tested to help identify and troubleshoot any issues that occurred. The Test Grid program went through a process of characteriza-

PD-TESS Test Grid Wireless Dual Band Radios

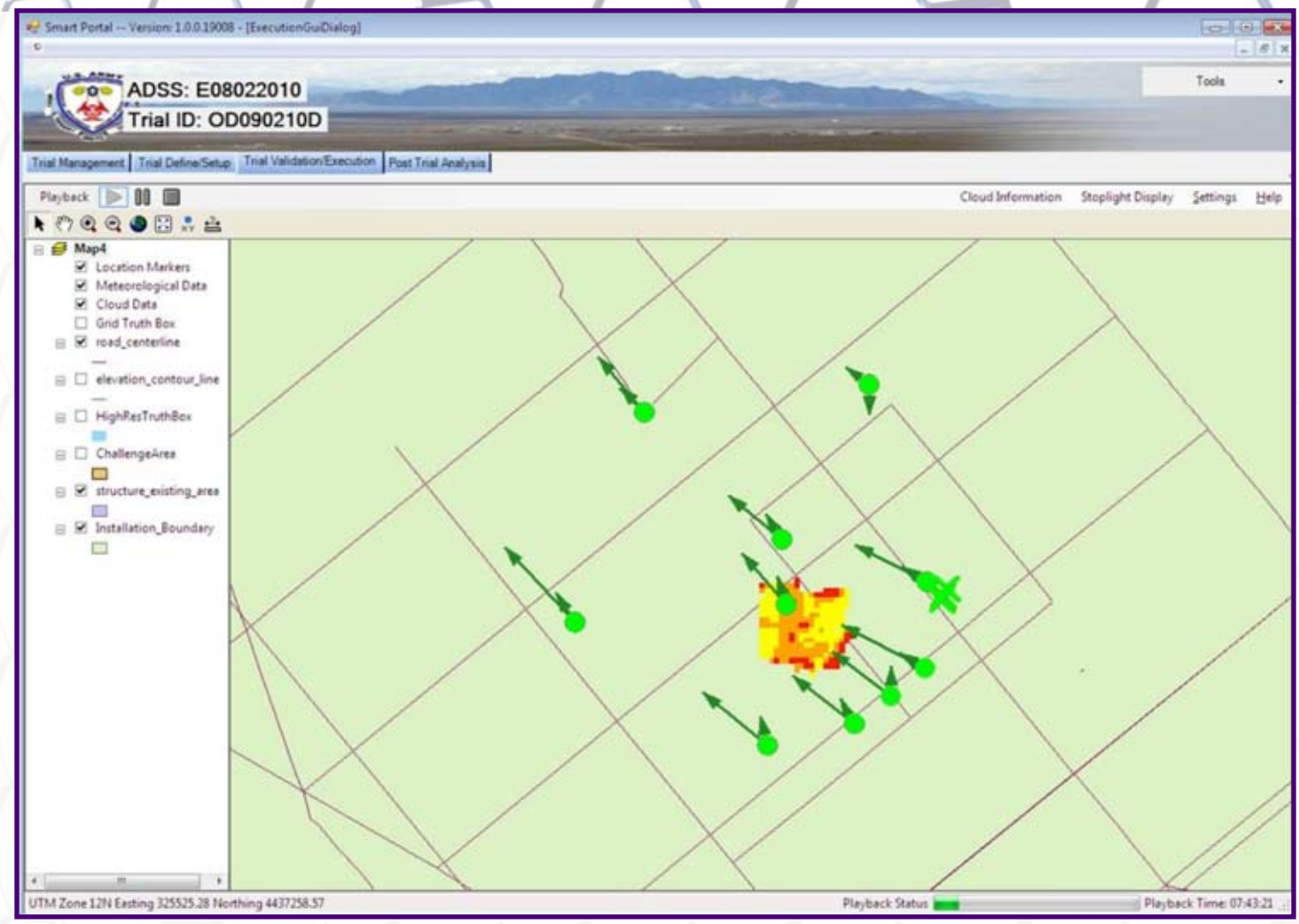

Screen Shot of the Chemical Cloud Tracking System detecting simulate movement on the graphical user interface

tion testing referee instruments to ensure the accuracy and reliability of the data received. Although the CBRN countermeasures industry develops most of its defense equipment for use by the military, this equipment must still undergo additional testing conducted by the DoD before these defense systems are cleared for use by our Warfighters. The systems tested must meet desired customer requirements, and the data is compared to other referee instrumentation to choose which device performed the best during testing. This comparison ensures that the capabilities of the devices meet the requirements detailed in the RMRs.

The PD-TESS Test Grid program held a successful Operational Demonstration (Op-Demo) to display the Test Grid's capabilities at DPG. The Op-Demo gave viewers the opportunity to see 3D simulant vapor concentration data and have it displayed on a mapping application visualizing chemical vapor cloud tracking in near real time. The DoD participants were impressed with the PD-TESS Test Grids effort and how well the devices were integrated. The Op-Demo also allowed viewers to gain a firsthand view of the Test Grid's graphical user interface which allowed for easy usage, a relocatable radio access network, and the capability to timestamp and transport data. The DPG personnel continuously referenced their current capabilities in comparison to the new Test Grid and felt it would be a great asset to move into the future with chemical biological monitoring using the PD-TESS Test Grid. What impressed the audience the most was the Test Grid's quick set-up and tear down times, the ability to troubleshoot any aspect of the equipment by the click of a button, and the Test Grid's ability to transfer and store all collected data to a central location, allowing for the starting and stopping of testing wherever Wireless Fidelity (Wi-Fi) is available.

The PD-TESS Test Grid will be a valuable asset to the Warfighter. Today's customer requires more efficient and timely collection of data than that received in previous decades. When complete, the PD-TESS Test Grid will not only allow the customer to view stimulant testing data in near real time but the Test Grid will also allow the user to control and access the testing data from a remote location, monitor testing activity, transmit and access encrypted data, start and stop dissemination devices, receive real time health & status updates, and provide centralized, local data storage. Most importantly, the PD-TESS Test Grid will assist the DoD acquisition community by providing a test and evaluation source that can help yield shorter product development times. All of which leads to equipping our Warfighters with needed capabilities in the shortest time possible.

APBI

ADVANCE PLANNING BRIEFING FOR INDUSTRY

September 19 – 21, 2012

- The Advance Planning Briefing for Industry (APBI) is your opportunity to connect with the Joint Program Executive Office for Chemical and Biological Defense!
- Schedule One-on-One Sessions with the Joint Project Managers
- Network with Key Players in the CBRN Countermeasures Community

CONNECT WITH THE JPEO-CBD

Baltimore Hilton Hotel
401 West Pratt Street
Baltimore, MD 21201

Additional Information and Registration: www.ndia.org

HONORING those who SERVE

Jeffery Potts, an Operations Analyst with the Camber Corporation in support of the JPEO-CBD's Joint Project Manager-Guardian, knows today's Warfighter first hand. Just a few short months ago, he was an active duty Army Captain and Team Leader serving in support of United States Forces – Iraq. His team conducted a wide variety of operations including munitions/improvised explosive devices assessment, tactical sensitive site assessment/exploitation, field analytics/triage, and personal security.

Mr. Potts and members of his team from Combined Joint Task Force (CJTF)-Troy were recently honored by the Office of the Director of National Intelligence for exemplary work performed while serving in Iraq. Members of the CJTF–Troy team were awarded the National Intelligence Meritorious Unit Citation for their successful planning, coordination, and execution of the collection operations and subsequent forensic analyses that led to the confirmation of terrorist activity that posed a unique threat to the United States and its national interests abroad. Mr. Potts is representative of the experienced and knowledgeable workforce that comprises the JPEO-CBD.

U.S Army Capt. Jeffery Potts, now an Operations Analyst with the Camber Corporation, was honored by the Office of the Director of National Intelligence for work conducted in support of United States Forces - Iraq.

U.S. Army 20th Support Command (CBRNE):

By: Mr. Robert Carter, JPEO-CBD Exhibits Coordinator

The U.S. Army 20th Support Command (CBRNE) plays a key role in the joint counter-Improvised Explosive Device (IED) fight to protect Warfighters by supplying training and personnel to Soldiers preparing for duties within Task Force Paladin (the Explosive Ordinance Disposal force in Afghanistan). Since its activation in 2004, the 20th Spt. Cmd. (CBRNE) has deployed more than 20 units and a headquarters element each year to Operation Iraqi Freedom and Operation Enduring Freedom for counter-IED operations and Chemical, Biological, Radiological, Nuclear, and Explosive (CBRNE) force protection, exploitation, and elimination operations. The 20th Spt. Cmd. (CBRNE) is capable of exercising command and control of specialized CBRNE

Ready for the Challenge

operations in support of Joint and Army force commanders primarily for overseas contingencies and warfighting operations but also in support of homeland defense. In order to maintain proficiency, the Soldiers of the 20th Spt. Cmd. (CBRNE) regularly conduct training missions known as Capabilities Exercises (CAPEX) at their home station on the Edgewood Area of Aberdeen Proving Ground, MD.

On January 25, 2012, Special Forces representatives from Canada and the United Kingdom converged on Aberdeen Proving Ground's Warrior Training Center to exchange ideas and expertise with members of the 20th Spt. Cmd. (CBRNE) and to observe a CAPEX. A CAPEX is a coordinated and comprehensive event that provides an effective demonstration of the equipment, tactics, techniques, and procedures that each of the specialized elements of the 20th Spt. Cmd. (CBRNE) utilize to successfully carry out their mission.

"CBRNE Soldiers are going to play an increasingly important role in the defense of our nation now that the wars in Iraq and Afghanistan are winding down and the focus is now more on our homeland defense mission," noted Master Sgt. James Rouse, Operations Sergeant for the 20th Spt. Cmd. (CBRNE) and Noncommissioned Officer in Charge of the January 25th exercise.

In addition to providing Soldiers within the Command the training required to successfully and safely accomplish their mission within threat areas, CAPEXs allow federal and state agencies as well as allied countries to learn more about the broad range of capabilities that the 20th Spt. Cmd. (CBRNE) possesses.

"These demonstrations are more important now than ever before," added Master Sgt. Rouse. "We have to show not just outside agencies but our foreign allies that the 20th Support Command stands ready to meet the emerging challenges of the CBRNE battlefield."

Joint Project Manager Biological Defense

By: Maj. Nicole E. Willis, Assistant Product Manager, Joint Biological Standoff Detection Systems
Joint Project Manager – Biological Defense

Red Dragon is the US Army Reserve's (USAR) premier, annual exercise for Homeland Operations and Chemical, Biological, Radiological, and Nuclear (CBRN) Consequence Management. This exercise enables the USAR forces to plan, train, execute, and assess its capabilities by conducting consequence management missions in support of civilian authorities. The first Red Dragon exercise was conducted in 2000 and has grown significantly due to the importance of the mission. Red Dragon 2011 was held on June 4-17 and included over 2,000 chemical, medical, logistics, and signal Soldiers. The exercise was conducted simultaneously in the states of Alabama, Georgia, Illinois, South Carolina, and Wisconsin.

The 472nd Chemical Battalion from Chicago, IL was tasked to conduct consequence management operations in defense of Biological Warfare Agents. The unit is equipped with multiple Biological Integrated Defense Systems (BIDS) and six Joint Biological Standoff Detection System, Increment 1 (JBSDS 1). Together, these two systems provide the Warfighter with a layered and integrated defense with the capability to provide advanced warning and detection. The JBSDS 1 provides a standoff capability utilizing light detection and ranging technology with detection and discrimination ranges of 5 km and 1 km respectively. The BIDS provides sampling and field identification using mass spectroscopy and antibody-based technologies, and has the ability to produce a transportable sample for laboratory confirmation.

Members of the 42nd Chemical Battalion set up the JBSDS 1

On June 11th, the 472nd Chemical Battalion deployed to Fort McCoy, Wisconsin. The 472nd conducted 24 hour operations that focused on site surveillance, sampling, and sample evacuation. The Joint Project Manager, Biological Defense (JPM BD) personnel and combat developers from the U.S. Army Chemical, Biological, Radiological, and Nuclear School (USACBRNS) were on hand to support the unit. The combat developers were able to refine concept of operations (CONOPS) and training, tactics, and procedures (TTPs). "It is imperative that we get the CONOPS and TTPs right. We don't get a second chance when an actual biological warfare agent event takes place," noted Frank Lewis, USACBRNS Combat Developer. Additionally, the combat developers helped the Soldiers improve their reporting processes and preparation tasks for the transfer of BWA samples. The JPM – BD representatives provided system technical expertise and conducted the simulant releases. Dr. Dan Onderein of JPM-BD noted, "The vari-

2011 Red Dragon

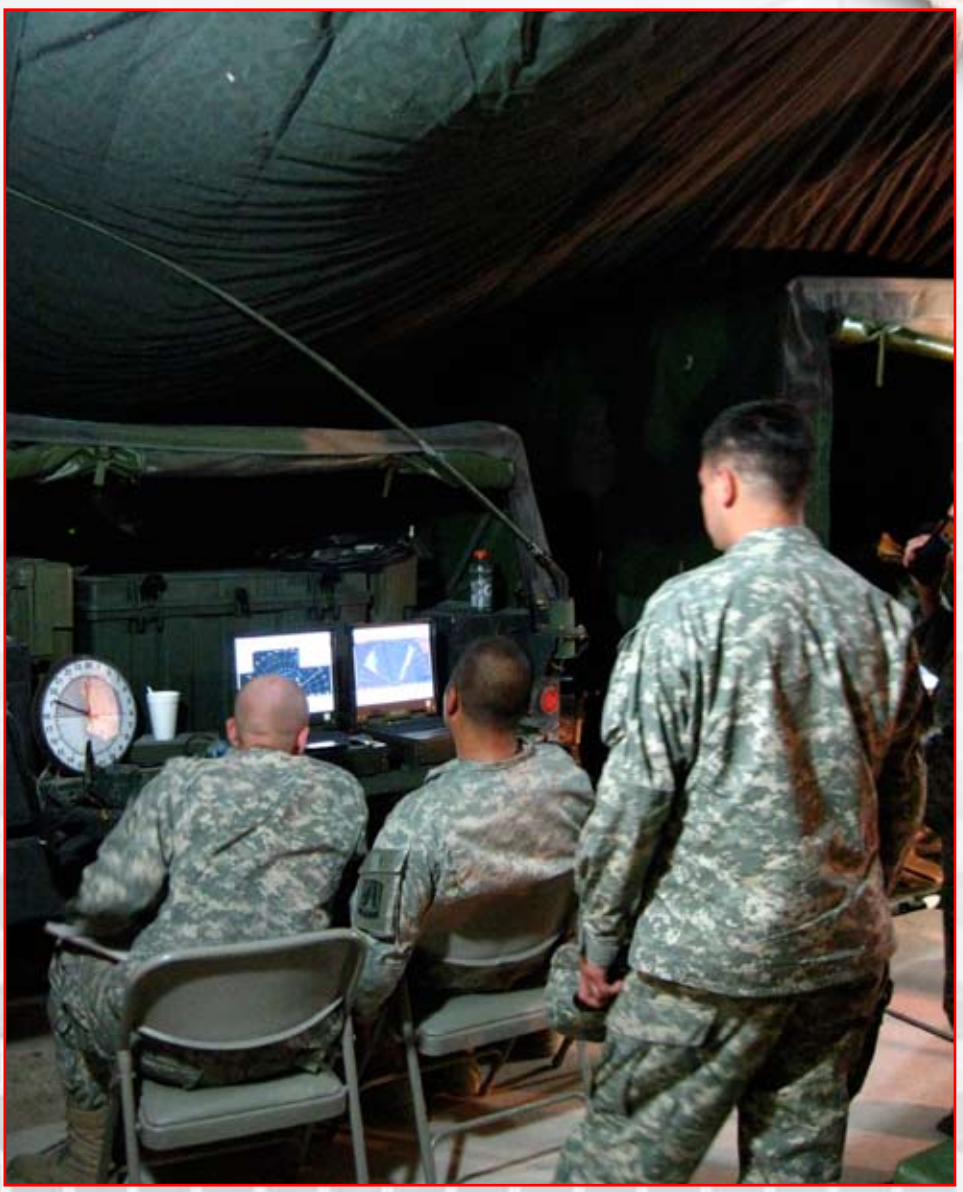

Red Dragon participants monitor the JBSDS 1 display screen in the Tactical Operations Center

ability of weather conditions makes BWA simulant releases very challenging. Simulant releases are essential to supporting realistic training scenarios." The lessons learned from the Red Dragon 2011 exercise will directly contribute to the development of other biological systems, such as the JBSDS Increment 2 and the Joint Biological Tactical Detection System.

A major goal of Red Dragon 2011 was the civilian-military interface and coordination. The overall exercise included participation by local and state authorities. "Communication is both the easiest and the hardest task to accomplish…but this exercise has allowed us to show these guys [local government leaders] what we [military] bring to the table," said PFC Craig Williams of the 342nd Chemical Company. Red Dragon also serves to exercise emergency operation centers, at the county level, by allowing the workers to link up with their state and Department of Defense partners to make requests for anything they may not be able to provide.

In coordination with the US Army Chemical School, JPM-BD will continue to support the operational units. Red Dragon 2011 is an excellent example of how the major stakeholders within the CBRN community are working together to improve the nation's defensive capabilities.

Supporting the Warfighter with Biodefense Vaccines

By: Kristin Stassi – Consultant, Booz Allen Hamilton
Joint Project Manager – Chemical Biological Medical Systems

Lieutenant Colonel David P. Hammer is the Joint Product Manager for the Joint Vaccine Acquisition Program (JVAP) within the Chemical Biological Medical Systems Joint Project Management Office (CBMS) located on Fort Detrick, Maryland. In this role, he is responsible for new biodefense vaccine advanced development through Food and Drug Administration (FDA) licensure and sustainment programming and management for already approved biodefense vaccines. The JVAP portfolio currently includes vaccine development programs for botulinum toxin A/B, pneumonic plague, weaponized Ebola & Marburg viruses, as well as sustainment programs for the anthrax and smallpox vaccines. Lt. Col. Hammer assumed his current role as Product Manager in July 2011; however, his experience with JPEO-CBD products spans well over a decade.

What is your role as Joint Product Manager?
I manage the development of vaccines to support biological defense. My role is to ensure my team is properly resourced with funding, time, personnel, and direction so they can effectively develop their products. The best part of my job is the people. This is the first time in my career that I have worked with this many people who have little or no military experience. Their passion and commitment is excellent, and there is a tremendous focus on supporting the Warfighter.

Describe JVAP. How does your product office support the Warfighter?
The JVAP is responsible for taking vaccines that are being developed for biological agents from the research process to FDA licensure. Essentially, we take a product that has been developed at a lab level and develop it into a product that can be manufactured on a much larger scale and that is licensed for use by the FDA. The FDA licensure is critical because it provides the framework for both safety and efficacy. Probably the most important thing to know about JVAP is that we develop vaccines for biological agents, not infectious diseases. The vaccines we develop provide protection for the Warfighter against some of the nastiest biological agents that our enemies hope to weaponize.

How does JVAP fit into the global chemical biological countermeasures picture?
All of JVAP products are developed through an interagency (Federal government) and an international framework. This ensures that our products are supported and understood by our own government as well as our international partners. Product knowledge and funding can be shared to maximize the development process.

What are JVAP's most recent successes?
We recently finished a phase II clinical trial with our botulinum toxoid vaccine and will complete a phase II clinical trial for the RF1V

plaque vaccine during this fiscal year; both of these products will reach a Milestone C [Low Rate Initial Production] decision during fiscal year 2013. The JVAP has also transitioned our two products that are in sustainment, Anthrax Vaccine Absorbable and Small Pox Vaccine, to Health Affairs. Although still managed by us, the funding for these two products will come directly from the Health Affairs and will no longer be part of our JVAP budget.

What experiences have you had using JPM-CBMS products while deployed?

The JVAP has two products that are in sustainment and are used to vaccinate our forces prior to deploying in certain operational scenarios. The Smallpox and Anthrax vaccines have been used extensively since the War on Terrorism started in 2001.

During deployments and training exercises, I have been trained on most of the CBMS and JPEO products. Obviously, like all U.S. forces, I have enjoyed the pleasure of donning my NBC suit, mask, gloves, and boots to enjoy the pleasures of operating in MOPP4 and an NBC chamber. In addition, our NBC training has involved CBMS Medical Identification and Treatment Systems products such as Nerve Agent Antidote Kit, Convulsant Antidote for Nerve Agent (CANA), and Reactive Skin Decontamination Lotion (RSDL). I was also trained as my unit's Chemical officer in the mid-90's and learned the various methods of tracking chemical and biological attacks and using a map to ensure decontaminated areas were avoided as much as possible.

In addition to receiving training for these products, my previous assignments as the medical logistics planner for Army Central Command and as the chief of operations at the United States Army Medical Materiel Agency allowed me the opportunity to manage the storage and distribution of many CBMS products, including RSDL, CANA, and Mark I Kits (Nerve Agent Antidote) as well as Smallpox and Anthrax vaccines. CBMS products are unique in that the overwhelming desire is that they are never used.

Have you had any interesting scenarios or situations involving JPM-CBMS products that you'd like to share?

I think one of the more interesting moments in my career was participating in the beginning of mandatory vaccinations for Anthrax. I was a company commander in Korea in 1998-1999 when the vaccinations started, and I stood at the front of the line with my Batallion Commander to receive the first vaccinations at Camp Carroll, Korea.

Is there anything else you would like the CBRN community to know regarding JVAP, CBMS, or the JPEO-CBD?

It is a wonderful experience to be working within the JPEO; this is the most exciting, challenging and rewarding opportunity of my career!

PHYSICAL interfaces

By: Bill Frame, JPEO-CBD Software Support Activity Architecture Team

Volume II of the Common Chemical, Biological, Radiological and Nuclear Sensor Interface (CCSI) was developed to serve as a "contract" between JPEO-CBD and combat vehicle developers to ensure that a consistent method for physical interface of CCSI sensors was followed. In CCSI version 1.1, changes to Volume II fell into three categories: incorporation of the appendix into the base document, updating the design drawings to reflect what has been implemented, and removing confusing wording related to the CCSI mounting capability.

The appendix to Volume II was removed and the information was incorporated into the base document. Most of the material was common to both the base document and the appendix, and numerous inconsistencies were found between the two. Combining the two eliminated duplication and resolved the inconsistencies.

The mechanical engineering design drawings for the dovetail mount in CCSI v1.0 changed after experimentation on several test beds took place in the 2007 – 2008 timeframe. The result is a completely new set of drawings in CCSI v1.1 Volume II. The dovetail, as published in CCSI v 1.1, has been produced in prototype form, and is expected to reflect the measurements that will be used in production.

Chemical detector used in the dovetail mount

When the CCSI v1.0 standard was written, there were statements in the CCSI v1.0 document indicating that certain measurements were expected to generate requests for waivers, due to the lack of field use for the mount in the fall of 2007. In part, the reason for this was due to the nature of CCSI v1.0 existing as a "snapshot" of the CCSI Standard at the point where it was published; many parts of CCSI were still in an Engineering Development phase– including the dovetail mounting capability. There was confusion over these words, including misinterpretation of the statements to mean that the entire Volume II was optional. The statements were removed or reworded to remove this misconception.

in the CCSI

Common CBRN Sensor Interface

Sensor Specifications

The CCSI sensors are categorized by size, weight, and power, but the use mode is also considered. The smallest are the hand-held sensors which communicate with a host platform via a wireless link or by a wired link in a mounting cradle. These sensors are limited to 216 cubic inches in size, 2 pounds in weight, and 12 Watts of power consumption. No mounting is required by CCSI for these sensors, since the sensor may be used with no fixed or vehicle mount. It is optional at the discretion of program management based upon the program's needs.

The small sensors are 1 cubic foot or smaller, less than 5 pounds, and operate at 24 Watts or less. These sensors are specified as being capable of using the CCSI mount. As anyone who has tried to have holes drilled or wires run in a weapon system can tell you, this is a multi-year process, and many good components have been abandoned because it's often too difficult to get the holes and wiring approved. To avoid this situation, the CCSI cradle mount was designed and tested. The mounting includes the electrical and data connectors, allowing any sensor of its class to be installed with no structural changes. This can be done with a small additional cost in time and money to use the standard mount, as opposed to the very high cost in time and money to replace a proprietary sensor mount with another proprietary mounting system. A new sensor can be installed in the system by sliding it into the mount and installing the Sensor Description Document (SDD) into the host.

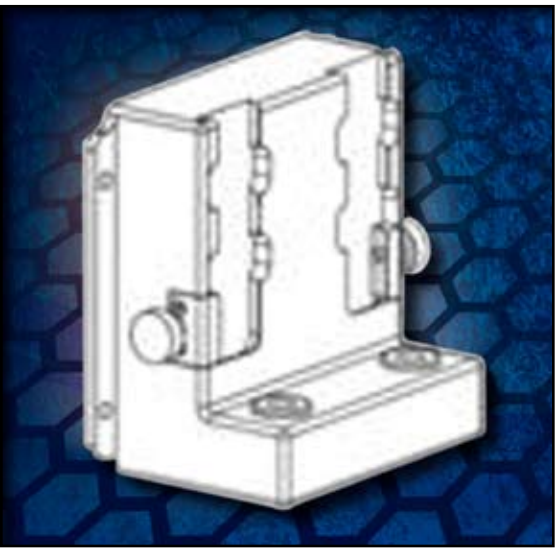

Two slot CCSI mount

The Joint Light Tactical Vehicle (JLTV) project is considering the CCSI mount. The CCSI Compliant Radiological Detector (CCRD) and Chemical Point Sensor (CPS) are being manufactured with this mount.

Large sensors are larger than 1 cubic foot, heavier than 5 pounds, or consume more than 24 Watts of power. Large sensors require special planning for installation, and are not suitable for the mounting concept used on the small sensors. The electrical and data connectors are specified by family.

Standardization of Components

The CCSI components were planned to have a standardized function within the standardized interface, and provide a method to allow interchangeable standard components that could be delivered as government furnished equipement to reduce the cost of sensors. The components have a standardized software interface described in Volume 3 Appendix D. These components are: Power Distribution and Interface Logic (PDIL), Control Component (CC), Sensing Component (SC), Dismounted Power Component (DPC), Wireless Communications Component (WCC), and the User Interface Component (UIC).

The Power Distribution and Interface Logic (PDIL) is the primary interface between the sensor and the host. This provides the wired data interface for setup, configuration, maintenance, and operation. This interface also connects the host power to the sensor and performs any necessary power conversion for the other components. The PDIL is aware of all the connected components, including multiple sensing components, and provides this information for reporting to the host system.

The Control Component (CC) coordinates communications between components, including the wired com-

"The CCSI standard was designed to standardize the mounting and connectors of sensors to allow interchangeability of sensors based on mission requirements and product improvement."

munications in the PDIL, and the wireless communications in the WCC. The CC controls the operation of all the installed components.

The Sensing Component (SC) provides the means to identify and quantify the contaminant being measured. CCSI only specifies the electrical and data interface to this component, and does not become involved in the methods used to detect, identify, and quantify CBR contaminants. Multiple Sensing Components may be used in a single sensor. For example, a sensor may include a biological contaminant SC, a chemical agent SC, a radiation SC, and a weather SC, all in the same container, and reporting as a single sensor.

The Dismounted Power Component (DPC) is an optional component used when the sensor is removable from the host structure. The DPC contains a battery and any necessary charging circuitry.

The Wireless Communications Component (WCC) is an optional component that provides the control and interface for any wireless communications device and the optional GPS. Wireless communications devices will be covered separately after a requirement for wireless exists, and is only specified as FIPS 140-2 Level 2. The GPS may be used for portable sensors that operate geographically independently from the host.

The User Interface Component (UIC) is an optional component used to control any local indicators or controls. While a sensor may be usable without any local user interface, some sensors may require LED indicator lights, a LCD display to give text or graphic information, level meters, control push-buttons, or other control or display items.

Volume II of the CCSI standard was designed to standardize the mounting and connectors of sensors to allow interchangeability of sensors based on mission requirements and product improvement, without the expense and time delay for system structure modification approval. It has the potential to reduce the cost of components by increasing scale of production, and increasing interoperability both at the sensor and system level.

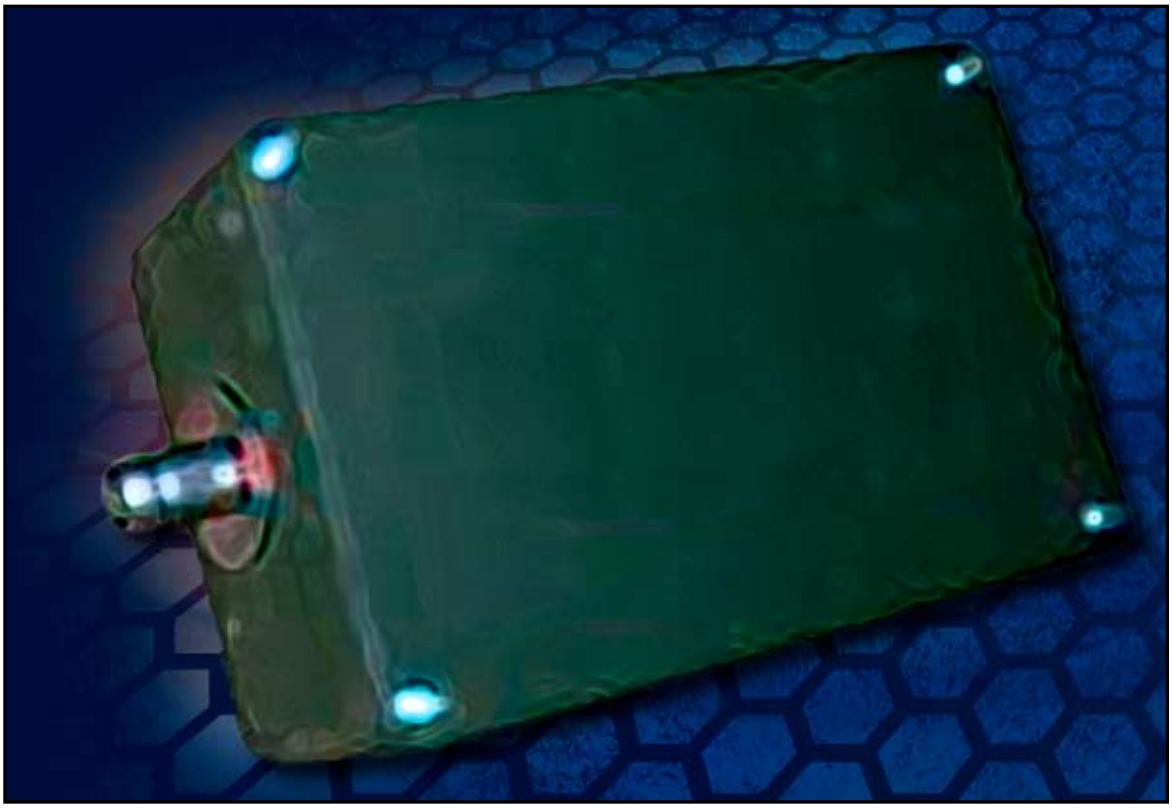

Radiac repackaged for use in the dovetail mount

CALL *For* Writers

The Chem-Bio Defense Magazine Wants Your Stories!

Share your accomplishments, stories, and photos.

Contact Cicely Levingston at cicely.r.levingston.civ@mail.mil

photo spotlight CBRN

U.S. Air Force Master Sgt. Art Bakke, right, and Tech. Sgt. Gary Anderson, both with the 119th Logistics Readiness Squadron, perform post-attack reconnaissance team duties during an operational readiness exercise at the North Dakota Air National Guard facility in Fargo, N.D. They were checking for simulated signs of biological or chemical weapons during the exercise. (U.S. Air Force photo by Senior Master Sgt. David H. Lipp/Released)

In Training

IMPROVING RELIABILITY OF SHIPBOARD CHEMICAL AGENT DETECTION

By: Bruce Corso IPDS-LR System Manager
Joint Project Manager – NBC Contamination Avoidance

Chemical warfare agent (CWA) detection is a priority to U.S. Navy Warfighters. Detecting an attack and having the capability to alert the ship and crew to the presence of CWAs is critical for saving lives and minimizing harmful exposure. The Improved Point Detection System (IPDS) has been providing U.S. Naval ships with automated CWA detection since 1999. The Navy is currently upgrading this system with a more maintainable, technologically improved version—the IPDS-Lifecycle Replacement (IPDS-LR). The IPDS-LR monitors exterior shipboard spaces when the ship is located in high-threat areas. Figure 1 shows the locations on the ship where air sampling units are installed. The detector is sufficiently sensitive to provide warning to shipboard personnel, thus allowing time for them to assume a chemical protective posture. The system is also resistant to the severe interferent environment on a naval vessel and capable of operating under harsh environmental conditions typical to naval ships.

Figure 1 – Ships with IPDS-LR External Air Sampling Unit (EASU) Installed

Though the IPDS continues to provide automated shipboard chemical detection, obsolescence and Reliability, Availability and Maintainability (RAM) issues will render the system unsupportable by 2014. Navy senior leadership requested the Joint Program Executive Office for Chemical and Biological Defense (JPEO-CBD) provide a near-term solution with improved capability.

The Joint Project Manager for Nuclear, Biological, and Chemical Contamination Avoidance (JPM-NBC-CA), under the JPEO-CBD, working with the Navy's Chemical, Biological, Radiological, Nuclear, and Explosives (CBRNE) Action Officer and Naval Sea Systems Command (NAVSEA) CBD Technical Warrant Holder, selected and evaluated potential Commercial Off-the-Shelf (COTS) solutions to this fleet request. Designated as IPDS-LR effort, the joint team evaluated multiple candidates in an open competition. The COTS systems were required to meet the original IPDS requirements supplemented with a robust performance specification and CWA surety detection requirements based upon updated information from the U.S. Army Public Health Command. The physical design of the system also needed to meet form, fit, and function requirements to allow reuse of shipboard IPDS installation foundations. Utilizing the same basic Ion Mobility Spectrometry (IMS) technology as the IPDS, the IPDS-LR demonstrated improved overall performance.

Due to parts obsolescence and the need for improved reliability, the IPDS-LR provides component-to-component replacement of the following six IPDS components:

- External Air Sampling Unit (EASU): The EASU (two per system) draws in air from outside the ship, filters out particulates, and transfers that air to the Detection Unit (DU) for analysis. Analyzed air from the DU exits the ship through the EASU exhaust line. The EASU intake/exhaust side is the only portion of the IPDS-LR that is on the exterior of the ship's hull. All other IPDS-LR components are located on the interior the ship's hull.
- DU: The DU (two per system) samples air from the EASU and analyzes the sample for the presence of CWA vapors. Upon identification of a CWA, the DU provides an alert message to the Control Display Unit (CDU) and Remote Display Unit (RDU). The DU is installed inside the hull of the ship and is located in close proximity to the EASU.
- CDU/RDU: The CDU is the user interface that provides the control functions, selects the state of the system, reports the system status, and provides audible and visual alarms upon detection. The RDU provides system status and alarm information to a second location (ship's bridge).

An extensive breadth of testing was conducted on the IPDS-LR system with an emphasis on installed Navy shipboard maritime environments to address the IPDS RAM issues. Over 16,000 hours of underway and in-port test time were collected on multiple ships (and ship classes) stationed at Norfolk, Virginia, and San Diego, California. Additional data collection is also planned aboard ships in forward deployed locations. The shipboard test data and concurrent laboratory testing against known interferents verified that the IPDS-LR met RAM, detection, and interferent rejection requirements.

The IPDS-LR underwent extended continuous system operation testing, at sea and in port, to characterize performance. During rainy weather, the original EASU design often pulled water through the inlet nozzle, saturating the sampling line membrane filter. The resulting blockage of airflow caused the sampling pump to shut down (system self-protection mode) and the detection unit to go offline until the water blockage was cleared (via system back flush or manual membrane drying).

To overcome the EASU air sampling

blockage issue in rainy environments, the IPDS-LR team and the IPDS-LR manufacturer (Bruker Detection Corporation) developed and implemented a design change on the inlet nozzle. The original

Figure 2 – Control Display Unit (CDU)

design consisted of four small holes, close in proximity, which were easily blocked by water droplets running down the ship bulkhead onto the inlet assembly. The new inlet nozzle has a large, flared opening, designed to deflect the water droplets while still allowing for air intake. Figure 3 shows the original and redesigned intake inlets. Follow-on shipboard testing with the new inlet nozzle resulted in no further water ingestion problems, and airflow "smoke" testing validated that the new nozzle design would not negatively affect the sampling airflow getting to the detector.

Shipboard test data were analyzed to determine system performance with respect to false positive alarms. This gives an indication of the system's ability to discriminate between interferents that exhibit chemical properties similar to CWAs. The IPDS-LR meets the operational requirement.

Figure 3 – IPDS-LR Inlet Design Change

Additional developmental tests were conducted, including CWA surety performance, environmental survivability (MIL-STD-810), Operational Service Life (maritime/salt air environment) and Electromagnetic Interference (EMI) qualifications. The installed system is required to be survivable (continue to work) after an attack, and no part of the system shall become a projectile hazard that may endanger personnel working in its installed location. This necessitated IPDS-LR qualification events where systems be installed on an afloat ship-simulating test apparatus. This same apparatus was subjected to multiple underwater munitions detonations to validate the system survivability. Upon certification of IPDS-LR readiness for operational testing, Follow-On Operational Test and Evaluation (FOT&E) was conducted by Commander Operational Test and Evaluation Force (COMOPTEVFOR), which participated in many of the aforementioned test events. Unique to the FOT&E, COMOPTEVFOR challenged the system with a CWA simulant to create an operationally relevant environment. These trials, with the ship both in port and underway, yielded positive results in September 2010. In November 2010, the JPEO-CBD approved Low Rate Initial Production (LRIP) of 10 systems for First Article Testing (FAT) and initial Navy fielding. Evaluation of FAT units began in February 2011. FAT testing was successfully completed May 2011. In June 2011, the JPEO-CBD approved the extended LRIP of 40 additional systems. Navy production system deliveries are planned (corresponding to Navy ship availability) for 2011 through 2017 with Initial Operational Capability (IOC) planned for 2012.

The IPDS-LR exemplifies the dedication of JPEO-CBD to respond to time-sensitive and challenging Service needs. A full competitive acquisition (including Director, Operational Test & Evaluation oversight) was accomplished in order to avoid continued use of a costly-to-maintain and nearly obsolete system.

Everything you need to know and more...

@jpeocbd

like us

View, download, and subscribe at:
www.issuu.com/jpeo-cbd