CHEM-BIO DEFENSE

Magazine

Vol. 8 No. 1

Improving with CHANGE

Front Cover: Design by Suzanne Kenney. Left photo of WWI gas mask. Digital image courtesy of the Nelson Provincial Museum. Right photo of a JSGPM Mask. Image courtesy of JPEO-CBD photo library.

Back Cover: Design by Steve Lusher. Images courtesy of JPEO-CBD photo library.

U.S. Marine Lt. Col. Brian Ehrlich, right, re-enlists U.S. Marine Corps Sgt. Aron D. Jarvi during an underwater ceremony at Maeda Point, Okinawa, Japan, Nov. 30, 2010. Jarvi, an avid scuba diver, enlisted in the Marine Corps for his second time during the ceremony. He is a warehouse clerk assigned to the Supply Battalion, Combat Logistics Regiment 35, 3rd Marine Expeditionary Force. U.S. Marine Corps photo by Lance Cpl. Robert J. Maurer

CONTENTS

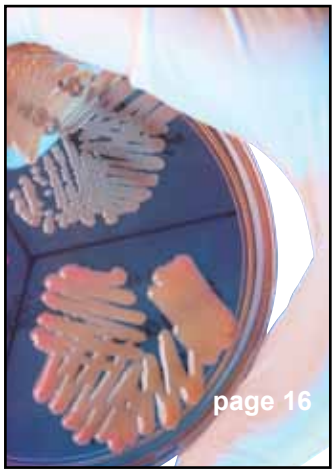

4 From the JPEO-CBD

6 Photo Spotlight

8 Force Protection Equipment Making a Difference on the Battlefield

11 Fox NBCRS Keeps Rolling Along

16 JPM Transformational Medical Technologies: Embracing Innovation and Pushing the Envelope on Biodefense

19 Policies and Procedures for Acquiring Spectrum Dependent Equipment

24 Joint Service Aircrew Mask, Apache Variant

25 Army Tactical Layered Protection Capability

28 Early Collaboration - Evolutionary Results

31 Honoring Those Who Serve

COL Charles Millard
USA

COL Brett Barraclough
USA

COL Daniel McCormick
USA

Mr. William Hartzell
USMC

Mr. Scott White
USN

Mr. David Hough
DoD

Mr. Joseph Cartelli
USA

From the JPEO-CBD

Brig. Gen. Jess Scarbrough
Joint Program Executive Officer for Chemical and Biological Defense

This issue of the Chem-Bio Defense magazine focuses on how the Joint Program Executive Office for Chemical and Biological Defense (JPEO-CBD) maintains its relevancy by continually adapting to change. JPEO-CBD operates in an environment where threats, technologies, requirements, and stakeholders' objectives can shift overnight. While these shifts may change our operational environment, they do not change our mission to field equipment and pharmaceuticals to counter or mitigate the chemical and biological threat. Even the smallest use of a chemical, biological, radiological or nuclear (CBRN) weapon can create instability, doubt, and fear among our citizens and allies. JPEO-CBD deploys interoperable systems at our installations worldwide to address this threat and we are developing broad-spectrum technologies that we will integrate into a system-of-systems approach to counter the evolving threat.

JPEO-CBD can only successfully execute our missions through regular and continuous communication among our stakeholders, decision-makers, and customers. Collaboration is essential in the CBRN defense environment and we are working closely with our inter-agency partners to defend and protect the homeland. With joint focus and key stakeholders, we are bringing future technologies forward to protect our military and the nation against the CBRN threat. JPEO-CBD, along with our industry, government agency and academia partners, serves under a single umbrella to streamline development, reduce costs, and strengthen end products. As our charter expands to encompass new missions, such as biosurveillance and increased installation force protection, the importance of our partnerships and the teamwork required becomes even more apparent.

Industry members, we hope you will join us for the Advanced Planning Briefings for Industry on September 7-9, 2011. During this event, discussions will include Joint Service mid- and long-range science and technology research, development, test, and evaluation plans and programs. It will also include future production projections and emerging military requirements, while highlighting specific contract opportunities. It is open to small and large businesses, universities, and interested contractors. For more information, see our invitation on page 10.

The CBRN defense portfolio is full of capabilities designed to meet specific needs. These capabilities range from protective suits and masks, protective tents, stationary and mobile detection equipment to the medical and sustainment fields. JPEO-CBD's mission is to remain ahead of our Nation's adversaries and to stop threats before they occur. Our focus is not just to provide products but to leverage talent and expertise from across the Services under a single chain of command, to provide the best chemical and biological defense technology, equipment and medical countermeasures at the right cost, at the right time, and at the right place.

Joint Program Executive Office

Brig. Gen. Jess A. Scarbrough
Joint Program Executive Officer

Mr. Douglas Bryce
Deputy Joint Program Executive Officer

Mr. Scott Paris
Chief of Staff

Col. Jonathan Newmark
Deputy JPEO-CBD for Medical Affairs

Ms. Brenda Besore
Director, Knowledge Management

Ms. Karan Williams
Director, Business Operations

Mr. Curt Wilhide
Director, Program Assistance & Program Assessment

Mr. Dave Ferris
Director, Policy, Standards & Integration

Ms. Emma Wilson
Director, Strategic Concepts & Technology

Mr. Darrell McCarthy
Director, Human Capital Management

Ms. Patricia Estep
Webmaster
webmaster@jpeocbd.osd.mil

Chem-Bio Defense Magazine Staff

Mr. Steve Lusher
Media Alignment & Communications
Steve.Lusher@jpeocbd.osd.mil

Ms. Tabitha Keese
Editor
Tabitha.Keese@jpeocbd.osd.mil

Ms. Suzanne Kenney
Graphic Designer
Suzanne.Kenney@jpeocbd.osd.mil

Mr. Spencer Chambers
Graphic Designer
Spencer.Chambers@jpeocbd.osd.mil

Mr. John Sours
Graphic Designer
John@js3design.com

Mr. Marc Lester
Graphic Designer
Marc.R.Lester@jpeocbd.osd.mil

Ms. Jacqueline Grosser
Distribution
Jacqueline.Grosser@jpeocbd.osd.mil

Chem-Bio Defense Magazine is published by the Joint Program Executive Office for Chemical and Biological Defense. Articles reflect the views of the authors and do not necessarily represent the views of Chem-Bio Defense Magazine, the Department of the Army or the Department of Defense.

To contact the editorial office:

Call: (410) 417-2967
Fax: (410) 417-2981
Email: *editor@jpeocbd.osd.mil*

Articles should be submitted to:

Chem-Bio Defense Magazine
5203 Leesburg Pike
Skyline 2, Suite 1609
Falls Church, VA 22041
www.jpeocbd.osd.mil

photo spotlight CBRN

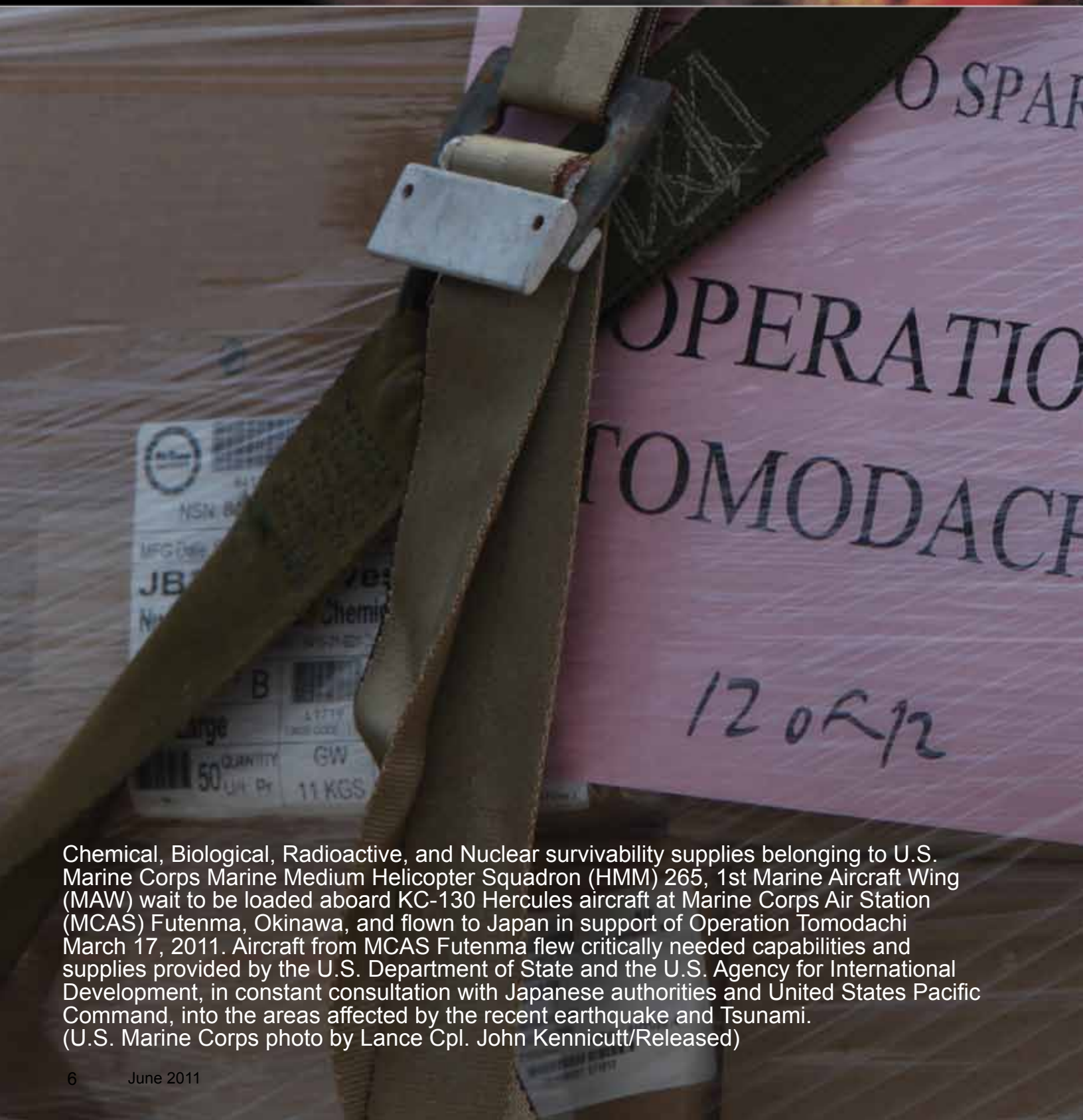

Chemical, Biological, Radioactive, and Nuclear survivability supplies belonging to U.S. Marine Corps Marine Medium Helicopter Squadron (HMM) 265, 1st Marine Aircraft Wing (MAW) wait to be loaded aboard KC-130 Hercules aircraft at Marine Corps Air Station (MCAS) Futenma, Okinawa, and flown to Japan in support of Operation Tomodachi March 17, 2011. Aircraft from MCAS Futenma flew critically needed capabilities and supplies provided by the U.S. Department of State and the U.S. Agency for International Development, in constant consultation with Japanese authorities and United States Pacific Command, into the areas affected by the recent earthquake and Tsunami.
(U.S. Marine Corps photo by Lance Cpl. John Kennicutt/Released)

Supports Japan

Force Pr

Improving security at Forward Operating Bases (FOB) in Afghanistan is a never ending problem for commanders in the battlefield. One of the major issues identified is the processing of cargo coming inside the FOBs at any given time. As part of the solution to this problem, the Product Manager, Force Protection Systems, began fielding the Military Mobile Vehicle and Cargo Inspection System (MMVACIS) in the summer of 2010 with outstanding results.

Since the addition of this system, Soldiers manning the Entry Control Points (ECP) have drastically decreased the amount of time spent during vehicle inspections. Before the installation of the MMVACIS, Soldiers spent an average of two to three hours verifying the content of each cargo truck entering the base. Previous vehicle inspection methods involved several Soldiers conducting inspections of vehicles and exposing them to significant risk. Soldiers can stand back and inspect cargo trucks in less than five minutes.

During my visit to one of the busiest ECPs in theatre at Bagram Airfield, I had the opportunity to interview a senior MMVACIS operator, SSG Daniel Perez from the 96th MP Battalion, an Army Reserve Unit from San Diego, California. SSG Perez stated that the addition of the MMVACIS to his ECP has significantly reduced the risks Soldiers experience while still allowing them to identify contraband more efficiently. During the month of January 2011, SSG Perez's unit was able to disrupt unauthorized personnel and cargo from entering the FOB through the ECP. During that period, the 96th MP BN discovered 30 propane gas tanks that were hidden inside a commercial van that led to the arrest of the perpetrators. On the same

Z-Backscatter Van

Relocatable Vehicle & Cargo Inspection System

Mobile Vehicle & Cargo Inspection System

Non-Intrusive Inspection Systems

NII Systems include mobile, re-locatable, and fixed site configurations. Mobile systems are mounted on a vehicle chassis. Re-locatable systems are ground-mounted systems which move on rails and can be relocated from one prepared site to another.

Fixed site systems are larger and more powerful which increases their ability to penetrate vehicles and cargo containers. These systems remain in place once installed. NII Systems utilize two main technologies for cargo examination: X-Ray and Gamma Ray imaging systems.

X-Ray Imaging Systems

X-Ray systems can employ two different types of detection: Transmission and Back Scatter. Transmission systems produce powerful X-Rays that penetrate the item being inspected.

Back Scatter systems use reflected X-Rays that can penetrate up to a quarter inch of steel and provide a "picture quality" view highlighting organic materials, such as drugs or plastic explosives.

X-Ray systems presently fielded by DOD include the ZBV, which is a Back Scatter only system mounted in a Daimler-Chrysler van and BVMT which is a Back Scatter system mounted on a standard military trailer.

An optional Forward Scatter trailer is available for both systems. This option allows for imaging of the far side of the target while utilizing low power Back Scatter systems.

Gamma Ray Imaging Systems

Gamma Ray systems utilize a nuclear source to generate gamma rays that penetrate the target vehicle or container being inspected. The Gamma Ray systems utilize a Cobalt-60 source.

rotection Equipment

Making a Difference in the Battlefield

By MAJ Angel D. Rojas, Assistant Product Manager, Force Protection Systems, Afghanistan LNO

day, a different vehicle attempted the same thing and the Soldiers at the ECP were able to disrupt the attempt once again.

Earlier in the month and just a few days after the New Year, another cargo truck attempted to infiltrate three unauthorized personnel onto the base. They were captured with the assistance of the MMVACIS image and turned over to the Military Police for processing.

This is only one of the many bases in Afghanistan that have benefited from the addition of the MMVACIS to the ECPs. As SSG Perez stated, his unit considers this system a blessing from the sky.

It is also important to recognize the contractor personnel that install, provide training to Soldiers, and maintain the equipment in theatre. Their expertise and experience is essential in ensuring these systems remain operational at all times.

The success story of the MMVACIS is a perfect example of the "One Mission One Team" concept of Soldiers and civilian contractor personnel working together to improve safety and efficiency on the battlefield.

Gamma Radiographic Detection System

Military Mobile Vehicle & Cargo Inspection System

Operators viewing real-time images on a video monitor can identify drugs, explosives, and weapons as well as voids, false walls or ceilings, and other concealed compartments typically associated with smuggling or illegal trafficking.

Operators searching for contraband can use the images to determine whether the cargo is consistent with the declared manifest.

Most Gamma Ray systems are Vehicle And Cargo Inspection Systems (VACIS). These share common software and hardware technologies and differ primarily in their physical configurations. The VACIS II is a re-locatable version of the VACIS.

The Mobile VACIS (MVACIS) is a commercial truck-mounted version of the VACIS.

The Military Mobile VACIS (MMVACIS) utilizes an armored, high-mobility, multi-wheel vehicle and out vehicle to operate in a wide range of environments. The MMVACIS gives the unit the capability to go "beyond the wire" and establish unannounced check points for interdiction missions.

The Rapiscan GaRDS gantry is a re-locatable System similar to the VACIS II but utilizes Rapiscan's proprietary software.

JOINT PROJECT MANAGER GUARDIAN

Joint Program Executive Office for Chemical and Biological Defense

Advance Planning Briefing for Industry

Baltimore Marriott Waterfront
700 Aliceanna Street
Baltimore, MD 21202

Day 1 & 2
General Session

Day 3
1-on-1 Breakout Sessions
with Joint Project Managers (JPMs)

9-17-2011

Visit www.ndia.org register • Event Number 1370

Fox NBCRS Keeps Rolling Along

For the last twenty years the Fox Nuclear, Biological, and Chemical Reconnaissance System (NBCRS) has been rolling along and adapting as new technologies were developed and perfected. The Fox has gone through a number of upgrades over the years. Upgrades have improved many aspects of the Fox's performance, covering a broad range from sensors to vehicle armor.

M93 Fox NBC Reconnaissance System (NBCRS)

The M93 Fox first made its way to the battlefield in the early 1990s in support of Operation Desert Storm. The Fox provided capability to conduct mobile and real-time NBC Reconnaissance of the chemical battlefield. The Mobile Mass

CROWS II

Spectrometer Version 1 (MM1), working in concert with the double-wheeled sampling system, provided the ability to detect chemical agent contamination on the battlefield. A robust positive-pressure collective protection NBC filtration system protected Soldiers during reconnaissance operations.

M93A1 Fox NBC Reconnaissance System (NBCRS)

In the 1990s the M93A1 upgrade added standoff chemical agent detection with the M21 Remote Sensing Chemical Agent Alarm, a ground temperature probe, a meteorological sensor, Global Positioning System (GPS), and the Multipurpose Integrated Chemical Agent Detector (MICAD). M93A1 communications upgrades included Vehicular Internal Communications (VIC-3) and two Single Channel Ground and Airborne Radios (SINCGARS) providing short and long range communications.

M93A1P1 Fox NBC Reconnaissance System (NBCRS)

During Operation Iraqi Freedom, the Fox M93A1 needed better protection from Improvised Explosive Devices (IED) and Rocket Propelled Grenades (RPG). In response to a 2004 Operational Needs Statement from the Multi-National Corps in Iraq, the Fox team modified twenty M93A1 Fox vehicles with steel plate IED armor, ballistic glass, and a steel cage of slat armor. The Common Remotely-Operated Weapon Station (CROWS I) replaced the hatch-fired M240 machine gun.

M93A1P2 Fox NBC Reconnaissance System (NBCRS)

continued on page 14

CROWS II demonstration on the M93A1P2 NBC Reconnaissance System

The most recent upgrade of 14 Fox systems resulted from an Urgent Material Requirement to meet the Warfighter needs in Southwest Asia (SWA). This latest improvement yielded the M93A1P2 Fox NBCRS. The M93A1P2 upgrade includes replacement of the MICAD with the CBRN Processing Group (CPG), an improved rear slat door and the replacement of the Common Remotely Operated Weapon Station (CROWS) with the improved Kongsberg Defense and Aerospace CROWS II. Joint Project Manager for Nuclear, Biological and Chemical Contamination Aviodance partnered with General Dynamics Land Systems (GDLS) and their subcontractors CACI and Rheinmetall Landsysteme (RLS) to develop the CPG for the Fox. In order to accomplish the change from the CROWS to the CROWS II, the Fox Team worked with both PM Crew Served Weapons and Booz Allen Hamilton.

Although functional, the MICAD depends upon obsolete components and is no longer supportable. GDLS, also the prime contractor on the Stryker NBCRV, was able to adapt much of the NBCRV's Sensor Processing Group (SPG) software and hardware into a comparable system for the Fox that integrates and displays data from multiple sensors to the commander. The commander now has a full size virtual keyboard through the touch screen, and with the use of a stylus, drop down menu options for navigating through the functions and capabilities of the CPG. A Panasonic CF-30 Toughbook computer serves as the processor for the CPG system. A writable CD drive allows for archiving all mission data collected from the sensors and NBC reports. The CPG will continue to be supportable due to the use of commercial off the shelf components.

The CROWS II provides an improved Forward-Looking InfraRed (FLIR) camera, better optics and enhanced shoot-on-the-move capability. The CROWS II was also incorporated onto all of the M93A1P1 systems.

The Fox continues to roll along with continuous improvements. Today, the Fox maintains a worldwide presence with the M93A1, M93A1P1 and M93A1P2 variants being located in Germany, Korea, SWA, and in multiple locations in the USA.

M93A1 (86 vehicles)

M21 & Camera
Global Positioning System
Remote MM1 Monitor and keypad
MICAD System
MET Sensors
Ground Temp Probe
SINCGARS & VIC-3

M93A1P1 (20 vehicles)

IED Armor
Ballistic Glass
Slat Armor
CROWS I

M93A1P2 (14 vehicles)

CPG replaces MICAD
Rear Slat door
Improved Technical Manual

Summary of upgrades to the M93 Series Fox

Joint Project Manager
Transformational Medical Technologies (JPM TMT)

Protecting the Warfighter & the Nation from Biothreats

New name...
new website...
new opportunities!

Coming Soon!

www.jpmtmt.mil

JPM TMT is moving to a new website address. Add and bookmark the website now and visit the site often for updates.

Also follow us on:

JPM-TMT:

Embracing INNOVATION

By Arlene Goyette, Communications Director, Joint Project Manager-Transformational Medical Technologies

Despite its short history, JPM-TMT program has emerged as the U.S. government model for advanced development and procurement of rapidly adaptable, broad-spectrum MCMs against emerging infectious diseases and genetically altered or unknown biological threats.

Modern advances in genetic manipulation, biotechnology and advanced biochemistry have paved the way for advanced weaponization of biological agents (biothreats) capable of mass casualties. Today, our nation's adversaries have the potential to develop and produce these biothreats quicker than it takes us to develop, license and produce a response. Additionally, many disease-causing pathogens have now become drug-resistant and the once-conquered diseases of the past are reemerging and threatening the lives of our Warfighters and civilians.

During the 2006 Quadrennial Defense Review (QDR), the urgent need to enhance our nation's response capability against biothreats was identified. The Department of Defense's (DOD) traditional approach for developing medical countermeasures (MCMs) against emerging and genetically engineered biothreats (by targeting specific disease-causing pathogens and their effects or "one drug, one bug" strategy) was determined insufficient and ineffective. A new approach was needed to effectively resolve the new biodefense challenge. As a result, the QDR directed the DOD to establish the Transformational Medical Technologies Initiative (TMTI).

JPM-TMT: Poised to Succeed

TMT's successes demonstrate a preliminary ability to respond to emerging and genetically engineered biothreats. JPM-TMT will build upon the achievements of TMTI and continue to engage and collaborate with partners from biotech firms, pharmaceutical corporations, other government agencies and academic institutions in order to fund innovative biodefense solutions for the Warfighter.

TMTI's notable accomplishments include:

- **Recognized as the first U.S. government agency** to invest in therapeutic candidates for the treatment of Ebola and Marburg hemorrhagic fever viruses (HFV). Investigational new drug applications havebeen filed with the Food and Drug Administration (FDA)—a first-of-a kind capability as there is no current treatment for either virus.
  - The FDA has accepted IND filings for the Ebola virus therapeutic and Phase 1 of Clinical Trials is now underway.
  - The IND filing for the Marburg virus therapeutic has also received final approval from the FDA to initiate Phase 1 of Clinical Trials.
- **Sponsored an IND application** for Emerging Infectious Diseases (EID) Medical Counter Measures against the H1N1 influenza virus to the FDA.
- **Successfully exercised capability** to rapidly identify, test and manufacture MCM against the pandemic flu (A/H1N1 S-OIV) in an animal population.
- **Acquired access to a comprehensive database** for evaluation of genetic sequences against potential drug targets from over 90 percent of pathogenic virus families that are capable of infecting humans.
- **Demonstrated a genetic sequencing prototype** capable of identifying genetically modified pathogens and new drug targets, which transformed a process that typically takes days into only a few hours.

and Pushing the Envelope on BIODEFENSE

JPM David E. Hough is presented with the Joint Project Manager Charter by BG Jess Scarbrough (August 2010)

TMTI revolutionized the DOD's biodefense strategy. Its shift from the "one drug, one bug" paradigm to a *broad-spectrum* or "one drug, *many* bugs" approach of developing MCMs against multiple threats, set the stage for a comprehensive response to biothreats. TMTI's mission, to protect the Warfighter from emerging and genetically engineered biological threats by providing a novel response capability, from identification of pathogens to the development of medical countermeasures, is supported by the following key performance enablers providing proof-of-process:

(1) Adaptable platform technologies for rapidly identifying unknown threats and generating countermeasures to newly identified threats, with the goal of having an infrastructure in place to react quickly to the use of unknown agents that may have been genetically engineered;

(2) Broad-spectrum MCM products applicable to treating viruses, especially hemorrhagic fever viruses (HFV), and intracellular pathogens, with the goal of having at least two investigational new drug (IND) applications filed with the FDA; and

(3) Genetic sequencing capability for screening, characterizing and identifying potential biothreats, with the goal of having all the sequences of pertinent threat agents against which countermeasures are developed.

Within five years, TMTI exceeded in meeting its goals of providing an initial, integrated capability to rapidly respond to emerging and genetically engineered biothreats (see callout box, "JPM-TMT Successes"). Its successes led to a decision by the Joint Program Executive Office for Chemical and Biological Defense (JPEO-CBD) to charter TMT as one of its Joint Project Managers. In 2010, TMTI became the Joint Project Manager-Transformational Medical Technologies (JPM-TMT) advanced development program office.

Continued on page 18.

- **Established a diverse biodefense products portfolio**—rivaling those of the civilian/commercial pharmaceutical industry—and encompassing an end-to-end response capability, from rapid biothreat identification and characterization through generation of therapeutics.
  - The only U.S. government agency to simultaneously fund and manage multiple performers with the most promising drug candidates and best technologies.
  - **The program's rigorous milestone-driven** program management approach, poised to redirect funding to accelerate promising candidates in the pipeline and terminate unsuccessful candidates early, is a U.S. government model for advanced development and procurement of rapidly adaptable, broad-spectrum MCMs against biothreats.

Photo by: AVI BioPharma, Corvallis, OR

Continued from page 17.

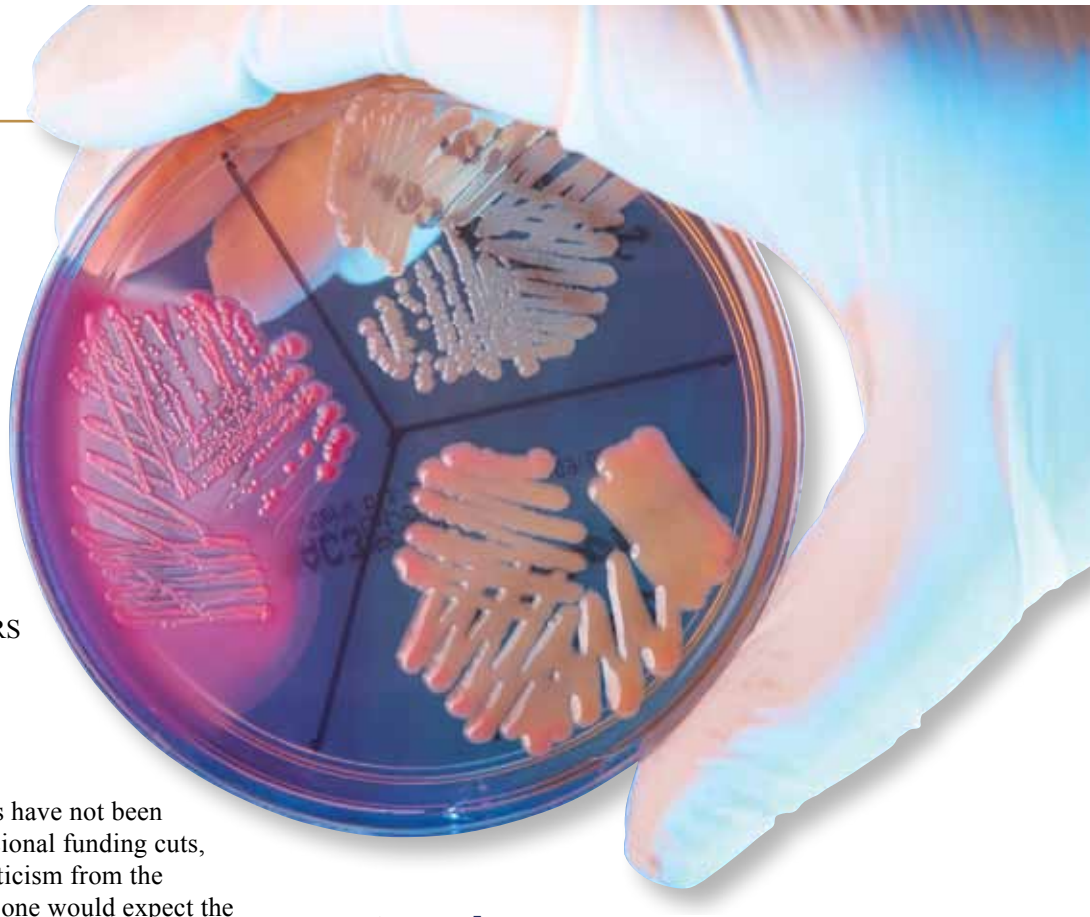

By embracing innovation and producing results, the program remains an integral part of the DOD's comprehensive National Biodefense Strategy and the Integrated National Biodefense Medical Countermeasures Portfolio, which is coordinated with the Executive Office of the President, Interagency and the DOD. JPM-TMT's real-world capabilities are critical to protecting our nation's Warfighters and civilians and an invaluable resource should another major pandemic event such as SARS or H1N1 swine flu occur again.

There is Much Work Ahead

It's no secret that JPM-TMT's successes have not been without struggles. After years of Congressional funding cuts, management turnovers, and growing skepticism from the media and the public, it's easy to see why one would expect the program to just hang up its coat and play it safe.

But despite JPM-TMT's many challenges, its steadfast leaders, JPM David E. Hough and his Deputy John Gorrell, are not about to hang up their coats and call it a day. Along with their dedicated team comprised of experienced program managers, acquisition professionals, contracting experts, and accomplished military and industry veterans, Hough and Gorrell forge on. There is much work ahead of them and they are in it for the long haul.

Hough and Gorrell's commitment to JPM-TMT's success is evident in the way they have embraced innovation—by fearlessly taking on risks and enduring the inevitable changes, failures and skepticisms that come with it. With this mindset, they have created a program office environment that not only fosters innovation but also encourages their team to reflect on JPM-TMT's failures, not just successes, in order to lay the foundation for a better path forward.

Undeterred by current industry standards (one drug can cost up to $1.3 billion and can take 10 to 15 years to make[1]), JPM-TMT is determined to push the envelope on biodefense. Fueled by innovation, the program uses a unique management approach modeled after commercial pharmaceutical organizations, which is novel within the DOD. In addition to examining lessons learned, JPM-TMT maintains a start-to-finish view of the drug development process (from research to advance development activities) to minimize the challenges related to product transitions. JPM-TMT also continues to implement commercial and government best practices and form tactical partnerships with other government agencies, academia and industry in order to explore ways to reduce the time and cost of developing and manufacturing an MCM.

Paving the Way

The lessons of the 2001 anthrax attacks and the 2009 H1N1 pandemic have taught us that our nation is vulnerable and there is clearly a need for a rapid response against such events. And while no one knows when the next deadly pathogen will show up or when another bioweapons attack will happen, being prepared is better than the alternative.

For JPM-TMT, inaction is not an option when it comes to protecting our Warfighters and the nation from biothreats. The program has already demonstrated its long-term commitment and innovative approaches to biodefense, and it's not about to give up or slow down its momentum.

Over the next few years, JPM-TMT will continue to build its pipeline by integrating the early scientific discovery of rapidly adaptable and broad-spectrum MCMs with the advanced development and acquisition capabilities of the JPEO-CBD. Specifically, JPM-TMT's ongoing collaboration with: the Translational Medical and Diagnostics and Disease Surveillance Science and Technology Divisions of the Defense Threat Reduction Agency, Joint Science and Technology Office-Chemical Biological Defense (DTRA JSTO-CBD) Directorate will ensure that MCM products and technologies being developed for the Warfighter are successfully transitioned for advance development and acquisition by the JPEO-CBD. Lastly, JPM-TMT will continue towards FDA approval of its HFV and EID MCM products and will pursue development of additional MCMs mitigating biothreats with further applications for the FDA.

[1]J.A. DiMasi, "New Drug Development in the United States from 1963 to 1999," Clinical Pharmacology and Therapeutics 69, no.5 (2001): 286–296; J.A. DiMasi and H.G. Grabowski, "The Cost of Biopharmaceutical R&D: Is Biotech Different?" Managerial and Decision Economics 28 (2007): 469–479.

Policies and Procedures for Acquiring Spectrum Dependent Equipment

By Hiekeun Ko, PhD, and Dan Reuben, JPEO-CBD JPM-IS Software Support Activity (SSA)

Purpose

Clarify policy and process for acquiring spectrum dependent (S-D) equipment or systems that transmit or receive radio waves such as radios, satellite systems, Global Positioning Systems (GPS), or wireless local area networks.

Help program managers understand cost, schedule and performance impacts for deploying their spectrum dependent systems into the highly competitive environment for this finite natural resource known as the electromagnetic spectrum.

Regulatory Requirements

Spectrum management policy and procedures apply to procurement of non-development items (NDI), commercial off the shelf (COTS) technology, Part 15 (Non-licensed device) including standard IEEE 802.11 wireless local area networks, in addition to formal acquisition programs.

Individual nations have sovereign right to manage and control the electromagnetic spectrum within their boundaries. A complex system of treaties, federal and Department of Defense (DoD) policies and directives, including administrative, operational and engineering procedures, govern management and use of the electromagnetic spectrum. The National Telecommunications and Information Administration (NTIA) Manual is the go-to authority on regulations governing use of the electromagnetic spectrum in the United States and Possessions (US&P). Basic regulations on spectrum management during the acquisition cycle:

A. Air Force Instruction 33-118, Electromagnetic Spectrum Management, 18 July 2005.

B. Army Regulation 5-12, Army Management of the Electromagnetic Spectrum, 1 October 1997.

C. CJCSI 6212.01E, Interoperability and Supportability of Information Technology and National Security Systems, 15 December 2008.

D. DoDD 5000.01, The Defense Acquisition System, 12 May 2003.

E. DoDI 4650.01, Policy and Procedures for Management and Use of the Electromagnetic Spectrum, 9 January 2009

F. DoDI 5000.02, Operation of the Defense Acquisition System, 8 December 2008.

G. MCO 2400.2A, Marine Corps Management and Use of the Electromagnetic Spectrum, 7 October 2009.

H. NTIA Manual of Regulations and Procedures for Federal Radio Frequency Management (Redbook), May 2010.

I. OPNAVINST 2400.20F, Electromagnetic Environment Effects (E3) and Spectrum Supportability Policy and Procedures, 19 July 2007.

Spectrum Supportability (SS) requirements are generated from capability documents during the Joint Capabilities Integration and Development System (JCIDS) process shown in figure 1. These documents include Initial Capabilities Document (ICD), Capability Development Document (CDD), and Capability Production Document (CPD). Material developers (MATDEV) should ensure that the Materiel Solution Analysis (MSA) identifies operational parameters that the MATDEV can use to define spectrum parameters.

Spectrum analysis is a supportability element of the Net Ready-Key Performance Parameter (NR-KPP). CJCSI 6212.01 establishes the format and content requirements of Spectrum Supportability statements for ICDs, CDDS, CPDs, Information Support Plans (ISPs) and Tailored ISPs (TISPs).

The Test and Evaluation Master Plan (TEMP) should address Spectrum Supportability and testing within the intended operational environment of the spectrum dependent equipment.

Spectrum Supportability Processes

Spectrum Supportability processes assess the likelihood that the electromagnetic spectrum will be available during your spectrum dependent equipment's life cycle, and that Electromagnetic Compatibility (EMC), electromagnetic interference (EMI), and Electromagnetic Environmental Effects (E3) risks are mitigated. These processes earn your spectrum supportability determination (SSD) from the Service Spectrum Management Office (SSMO) that is required before entry into Milestones (MS) B and C of the Defense Acquisition Management System (DAS). They also ensure availability of sufficient bandwidth and regulatory protection needed to perform the intended operational mission within US&P and/or host nations (HNs), and obtain a frequency allocation

for test and operations.

(a) Submit your Spectrum Supportability Risk Assessment (SSRA) to the SSMO to support each major milestone decision of the DAS.

(b) Submit equipment Spectrum Certification (SC) request to the SSMO to support each major milestone decision of the DAS.

(c) Submit your request for frequency assignment to the area frequency coordinator as needed to test or operate.

Spectrum Supportability Risk Assessment (SSRA)

DoDI 4650.01 requires MATDEVs to manage the risk of spectrum-related challenges to spectrum dependent system acquisition or procurement by conducting a successively more detailed SSRA at each DAS phase.

SSRA goals are to obtain equipment spectrum certification and spectrum supportability determination, provide reasonable assurance of the availability of sufficient frequencies for operation from HNs, and consider EMC.

SSRA includes the following assessments:

(a) Regulatory assessment addresses compliance of the spectrum dependent system with US national and international tables of frequency allocation and regulatory agreements reached at the International Telecommunication Union, and the stage and status of the spectrum certification process for all of the spectrum dependent systems that are part of the acquisition.

(b) Technical assessment quantifies the mutual interactions between a candidate system and other, co-band, adjacent band and harmonically related spectrum dependent systems, and identifies methods to mitigate effects of possible mutual interference.

(c) Operational assessment identifies and quantifies mutual interactions among the candidate system and US military spectrum dependent systems in the operational environment and identifies methods to mitigate possible instances of interference.

(d) Electromagnetic Environment (EME) and E3 assessment identifies and addresses all EME issues and interactions, including all electrical and electronic equipment that are part of the acquisition, and would degrade or compromise system operational performance.

Army policy emphasizes that the initial, interim, and final SSRA should all address regulatory, technical and operational requirements, spectrum dependent equipment capabilities, and EMC analysis. This content provides a more rigorous risk assessment than what is spelled out in DoDI 4650.01 which postpones technical and operational assessments until later in the acquisition cycle.

"Equipment Spectrum Supportability is based on federal law and failure to comply could negatively impact cost, schedule and performance."

SSRAs are generally submitted as an attachment to an email with a signed cover letter on the Joint Project Manager's letterhead.

Figure 1 tracks the SSRA process of documenting the spectrum dependent aspects of a system according to where the program enters the DAS.

Spectrum Certification

Spectrum Certification is the process by which development or procurement of a spectrum dependent system or equipment is reviewed and approved using DD Form 1494 for compliance with spectrum frequency allocations, regulations, and technical standards to ensure that radio-frequency spectrum is available prior to fielding and employment of spectrum dependent equipment. Service regulations emphasize that spectrum dependent equipment should not be purchased unless the equipment has an approved Spectrum Certification and an authorized frequency assignment. For example, even though a NDI or COTS is certified, they might not

The Contact Info of Each SSMO is as Follows:

Army Spectrum Management Office (ASMO)
Phone: 703-325-8211 or 703-325-8200
DSN: 221-8211 or 221-8200
paul.h.stoeberl.ctr@mail.mil or
jarvis.b.murray.ctr@mail.mil

Air Force Frequency Management Agency (AFFMA)
Phone:703-428-1544
DSN: 328-1544
brand.benbow@pentagon.af.mil

Navy / MC Spectrum Center (NMSC)
Phone: 703-325-2838
DSN: 221-2838
Navyspectrum.fct@navy.mil

Coast Guard Spectrum Management
Phone: 202-475-3551
alfredo.mistichelli@uscg.mil

The contact info for requesting a frequency assignment from area frequency coordinators is contained in the Service's spectrum management regulation. Make sure that your specific date, time, and frequency are permitted by the specific test site.

be allowed to operate in their low frequency bands in your HNs.

Joint Project Managers (JPMs) prepare and submit Spectrum Certification request for all new, or significantly changed operational spectrum dependent equipment including experimental, developmental, Advanced Concept Technology Demonstration (ACTD), Joint Capability Technology Demonstration (JCTD), COTS, Part 15, etc. Part 15 refers to non-licensed low power devices that meet the technical specifications prescribed in Federal Communications Commission Code of Federal Regulations, Title 47, Part 15 of the NTIA Manual Annex K. Examples of non-licensed devices are wireless local area networks, wireless microphones, hand held scanners, and cordless telephones. Non-licensed devices are afforded no protection from interference. If a Part 15 device causes interference to an authorized civilian or federal radio service, the non-licensed device must immediately cease operation. Because Part 15 devices have no vested or recognized rights to continue operations in any part of the radio frequency spectrum, Service policies emphasize the vulnerabilities in using Part 15 devices for mission critical applications. Due to individual Services' differences in policy regarding Part 15 device Spectrum Certification, their regulations should be reviewed to ensure applicability and compliance.

The DoD is transitioning to a Web-based Federal Spectrum Management System (FSMS) developed by the NTIA for submitting Spectrum Certification requests electronically. During the development of FSMS, NTIA is introducing the Equipment Location-Certification Information Database (EL-CID) to eventually replace the DD Form 1494 process. The latest release of EL-CID is available for download from the NTIA at http://www.ntia.doc.gov/osmhome/elcid/. JPMs should contact their respective SSMO and use the right Spectrum Certification form during this transition. For example, the ASMO provides the Equipment Spectrum Certification (ESC) Editor online tool for creating DD Form 1494 in PDF. The tool is available at https://esceditor.hqda.pentagon.mil. Contact the Stepstone help desk at stepstone-helpdesk@alionscience.com or (240) 646-3543 to request access.

Once the DD Form 1494 is created, JPMs submit the form via ESC Process Manager that is an online Spectrum Certification process tool provided by the ASMO. The ESC Process Manager processes unclassified Spectrum Certification related requests. The tool allows JPMs and others to apply for new Spectrum Certification, request changes to existing Spectrum Certifications, request HN Coordination, and submit questions. Access to the system requires both Army Knowledge Online (AKO) account and Business Process Management account. Contact ASMO at CIOG-6ASMOSpectrumCertificationBPM@conus.army.mil or (703) 325-8200 to register for system access.

Spectrum Certification Stages

Figure 1 shows the stages of the Spectrum Certification process. Spectrum Certification requests should be initiated immediately upon entry into the DAS and submitted as early as possible in the development process. They are updated for each stage during the system life cycle, including whenever changes are planned or made in system electromagnetic radiating characteristics or operational use including deployed locations. A Stage 3 for NDI or Stage 4 for COTS Spectrum Certification is required if military use is being planned. This schedule is aggressive because Spectrum Certification is required before authorization to operate for experimental testing (Stage 2), developmental testing (Stage 3), or operations (Stage 4) of spectrum dependent systems. Stage 1 and 2 Spectrum Certification usually takes from 6 to 18 months. Spectrum Certification Stages 3 and 4 take at least 6 months and may take up to 2 years for approval if requesting spectrum supportability comments directly from the mili-

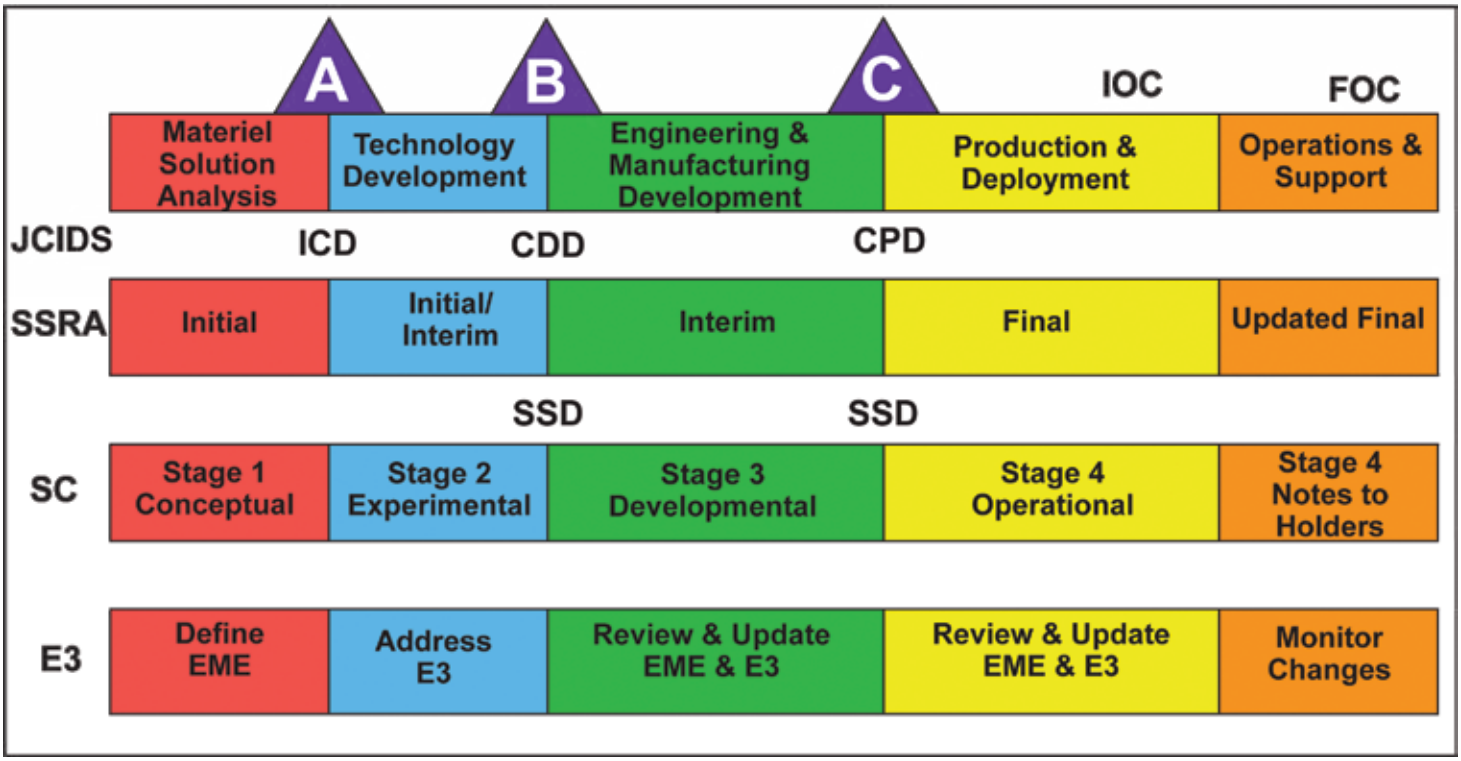

Figure 1: Spectrum Supportability and E3 in DAS Phases

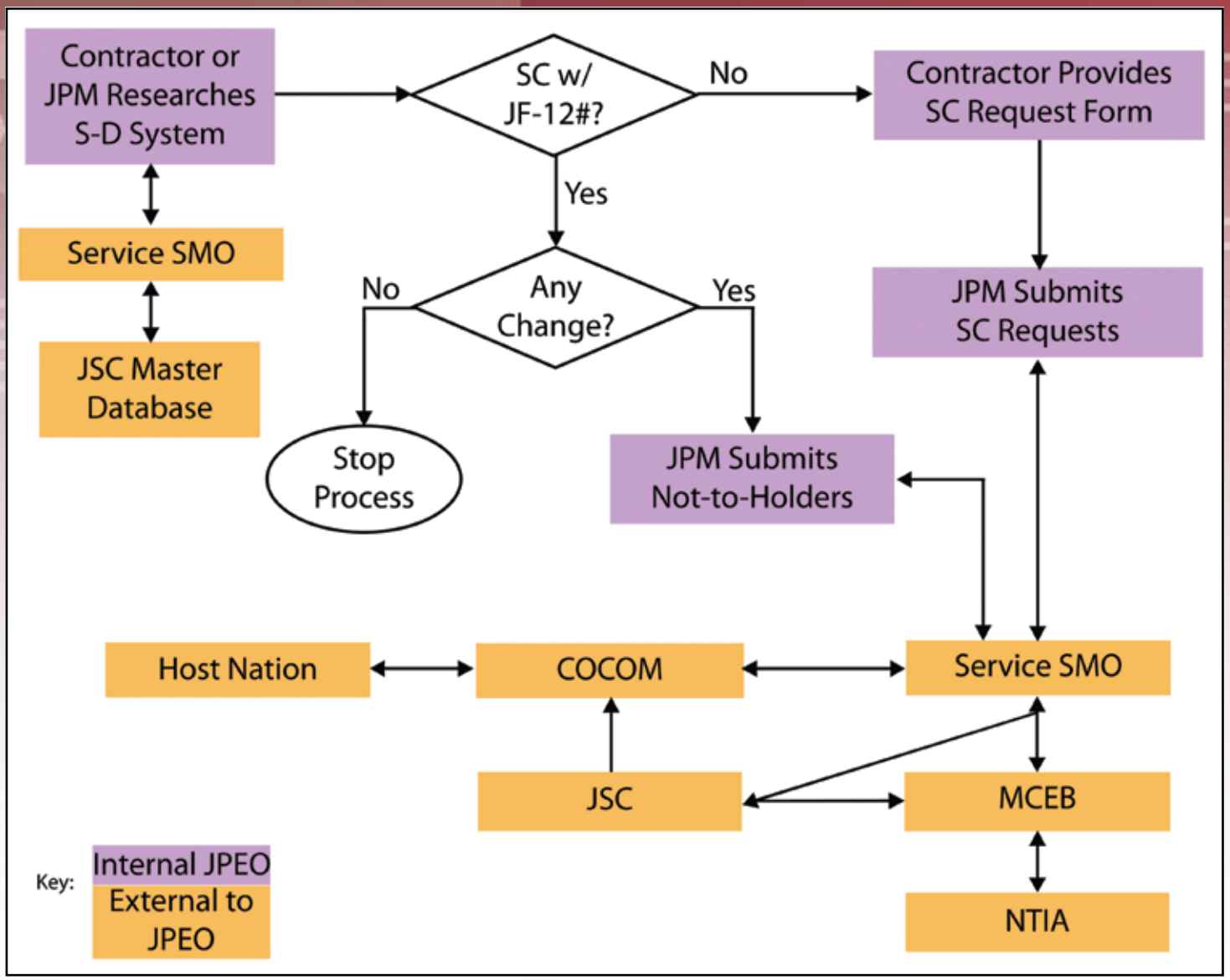

Figure 2: Spectrum Certification Process

tary and civil administrations of HNs.

Spectrum Certification Participants

Figure 2 shows the participants in the Spectrum Certification process. Spectrum Certification process is called the Joint Frequency Allocation-to-Equipment Process, or as it is commonly known, the Joint Frequency 12 (J/F 12) Process. Increasingly more measured data and usage information about your spectrum dependent system are provided to the spectrum management community during this process to ensure the equipment conforms to bandwidth, power, emission type, channelization, and various technical parameters specified in the Spectrum Certification request for the deployment locations.

The frequency range specified for the JPM's equipment must be identified to initiate the Spectrum Certification process. JPMs contact their SSMO and request a search in the Joint Spectrum Center (JSC) master database to find out whether or not spectrum dependent components of a system are already certified. If the spectrum dependent component is already certified, re-certification is not necessary unless the emission characteristics of the device are modified; however, it may be necessary to file a Request for Notes to Holder (explained below) to identify and document changes in usage or if different antennas have been incorporated.

If the Spectrum Certification component has not been certified, JPM submits the Spectrum Certification request to their SSMO who ensures that the equipment conforms to applicable regulations, standards, and national/international agreements before submission to NTIA and the Military Communication Electronic Board (MCEB) for approval. Their comments, approval, disapproval or changes are returned to SSMO. SSMO assigns each Spectrum Certification request a unique J/F 12 tracking number and forwards the Spectrum Certification request through a Joint process including JSC and MCEB to obtain DoD and NTIA approval. For systems with worldwide missions, when requested to do so by the JPM, SSMO will forward Stage 3 Spectrum Certification request to HNs through the appropriate Combatant Command (COCOM) for spectrum supportability comments. In order to ensure that HN coordination is completed to support deployment to HNs that are important to your mission, JPMs should use the remarks section of DD Form 1494 and a statement in their transmittal document to emphasize their request for COCOM coordination with those nations in the COCOM's Area of Responsibility.

Spectrum Certification Changes

There are two types of changes to Spectrum Certifications:

A. Amended form appended to an existing Spectrum Certification, submitted to the SSMO when:

- A new military scenario is planned for a previously approved item.
- Needs exist to alter any of the conditions of an existing allocation with respect to equipment characteristics, nomenclature, or intended operational environment.

B. Simple letter submitted to the respective SSMO in lieu of an amended Spectrum Certification form to request modification to a previous Spectrum Certification in the following situations:

- Adding the nomenclatures of equipment which have essentially identical technical and operating characteristics as a currently allocated item (changes to parameters must not exceed the allocated emission spectral envelope).
- Adding comments that have been provided by the NTIA or HN.
- Making minor changes to an approved allocation.
- Canceling or reinstating a frequency allocation.

The subsequent processing and approval of this request will result in a Note to Holder (NTH) being issued by the MCEB to the requestor, and all holders of the existing Spectrum Certification.

Summary

Equipment Spectrum Supportability is based on federal law and failure to comply could negatively impact cost, schedule and performance of your program. Failure to properly address E3 and Equipment Spectrum Certification requirements and issues leads to a variety of operational mission and readiness degradation problems and can even have catastrophic consequences. The JPEO-CBD JPM-IS SSA can help prevent these problems. For assistance please contact Dan Reuben at daniel.reuben@us.army.mil or Hiekeun Ko at hiekeun.ko@navy.mil.

CALL *For* Writers

The Chem-Bio Defense Quarterly magazine needs your support!

Volunteer to help communicate our accomplishments, value, and impact.

Are you interested? Do you know someone who is interested?

Contact Tabitha Keese at tabitha.keese@jpeocbd.osd.mil

Joint Service Aircrew Mask, MPU-6(V)/P, Apache Variant

By Christopher Ezelle

After an Excellent Operational Test, the U.S. Army Aviation Center of Excellence Concepts & Requirements Directorate said, "Let's get it in the field!"

Faceplate engaged

Faceplate disengaged

US Army Apache H-64A/D attack helicopters speed toward the enemy's front line. Intelligence states that they have a chemical-biological capability. In preparation; and prior to take off, these aviators donned their Chemical-Biological (CB) protective garments and are ready to snap on the faceplates to the mask hood ring. They are prepared to engage in virtually any hazardous environment. Ready for the attack, they secure their faceplates for CB protection and engage their targets. En route back to the installation, they receive intelligence that there were no agents used. The aircrew disengage the faceplate and stows it on the survival vest. The mask donning and doffing was completed while in flight.

The Joint Project Manager Protection (JPM-P) received approval for Full Rate Production from the Joint Program Executive Officer for Chemical and Biological Defense (JPEO-CBD) for a new Chemical-Biological protective mask capability that supports Apache attack helicopter aviators.

This is the first of the Joint Service Aircrew Mask (JSAM) Family of Systems to reach Full Rate Production. The mask is called Mask, Protective Unit – 6(V)/P [MPU-6(V)/P] and it replaces the legacy M-48 Apache mask that is manufactured at Pine Bluff Arsenal, Arkansas.

This new Apache mask variant provides head, eye, respiratory, and CB protection for US Army H-64 A/D Apache aircrews.

The faceplate is stowed on the aircrew member's chest, and in times of need, the mask is removed from stowage and snapped onto the wearer's hood ring around the face. It also provides the best optical system available, integrates with all crew stations, has a man-mounted supply system that is used without aircraft or life support equipment modifications, and provides improved comfort and reduced heat stress.

As another Department first, the MPU-6(V)/P is the first JSAM product that allows face-free flight during the threat of a chemical-biological attack. It introduces the uniquely novel, detachable faceplate.

Army Tactical Layered Protection Capability

Support to Operation Enduring Freedom and Operation Iraqi Freedom

By William M. Bezek, Acquisition Manager, Product Manager Force Protection Systems

Protection of military forces in today's rapidly evolving operational environment is a highly complex task requiring flexible, adaptive and integrated capabilities across fixed, semi-fixed and tactical locations in the Continental United States (CONUS), outside CONUS and across the theater of operations. Systems must be capable of providing a comprehensive and layered zone of protection. The Battlefield Anti-Intrusion System (BAIS, AN/PRS-9) and the Lighting Kit, Motion Detector (LKMD, AN/GAR-2) provide tactical force protection capabilities to Forward Operating Bases (FOB), Combat Outposts (COP) and Army units. Both systems are currently deployed with military forces operating in both Afghanistan (OEF) and Iraq (OIF). They provide threat detection, warning and identification of personnel and vehicles.

Soldiers Deploying BAIS Sensor.

BAIS

BAIS is a small, lightweight, Soldier-carried, modular unattended tactical ground sensor-based early warning system that provides intrusion detection and threat classification of personnel and vehicles to small units. It can operate as a tactical, stand-alone system, or is capable of being integrated into existing and future force protection and physical security systems.

LKMD is a small modular unattended tactical ground sensor-based early warning system designed to provide early detection, assessment and warning to small tactical units. It affords our Warfighters and security personnel a means to identify and provide the appropriate response to a host of combat, terrorist and physical security situations. LKMD provides programmable responses including illumination and audible alarm that increase operational reaction time for individuals, teams, squads or platoons. When a target is detected, LKMD illuminates the area with a variety of responses that include visible light, strobe or infrared illumination. Additionally, an audible, tactile or visible alarm is presented at the hand-held remote control module notifying the operator of an intrusion. LKMD can be employed as a tactical, stand-alone system or as part of a Force Protection Family of Systems.

BAIS achieved full rate production in 2005 and has fielded 1,378 systems since 2006. It has been integrated as part of the Force Protection Suite in the Base Expeditionary Targeting and Surveillance Systems-Combined (BETSS-C) currently fielded to 43 sites in OEF. Over 8,900 BAIS are planned for fielding to Infantry Divisions, Special Forces Groups, Military Police Brigades, and National Guard Units beginning in 4QFY11.

LKMD worldwide fielding began on 22 February 2011. Total Package Fielding

LKMD

BAIS provides early warning (up to 2 kilometers) and threat type identification (wheeled, tracked or personnel).

of 503 LKMD production systems was completed to the 2nd, 3rd and 4th Stryker Brigade Combat Teams and the 571st Military Police (MP) Company at Joint Base Lewis McChord (JBLM), WA, which also included associated New Equipment Training (NET). Over 34,000 LKMD systems are planned for fielding to Stryker Brigade Combat Teams, Heavy Brigade Combat Teams, Infantry Brigade Combat Teams, Special Forces, Rangers, Military Police, Engineering Companies, National Guard (NG) Unit and Reserve Units.

1st SFG LKMD Receiving NET

BAIS and LKMD are complementary equipment sets which together provide improved situational awareness and enhanced force protection capabilities to Army units worldwide. These systems, with other Product Manager, Force Protection Systems (PM-FPS) programs of record provide quick reaction capability to address emerging requirements. They offer an integrated, holistic enterprise approach to force protection which will address and reduce troop-to-task. They provide improved efficiencies in a resource constrained environment by potentially reducing installation and garrison guard force costs, and threats against fixed, semi-fixed and tactical locations.

For more information about these systems please contact: BAIS PM-FPS representatives: MAJ Angel Rojas, 703.704.1210, angel.d.rojas@conus.army.mil, or Mr. William Bezek, 703.704.2766, william.bezek@conus.army.mil; and LKMD PdM-FPS representatives: MAJ Jennifer Zais, 703.704.4143, jennifer.debruin@conus.army.mil, or Mr. William Bezek.

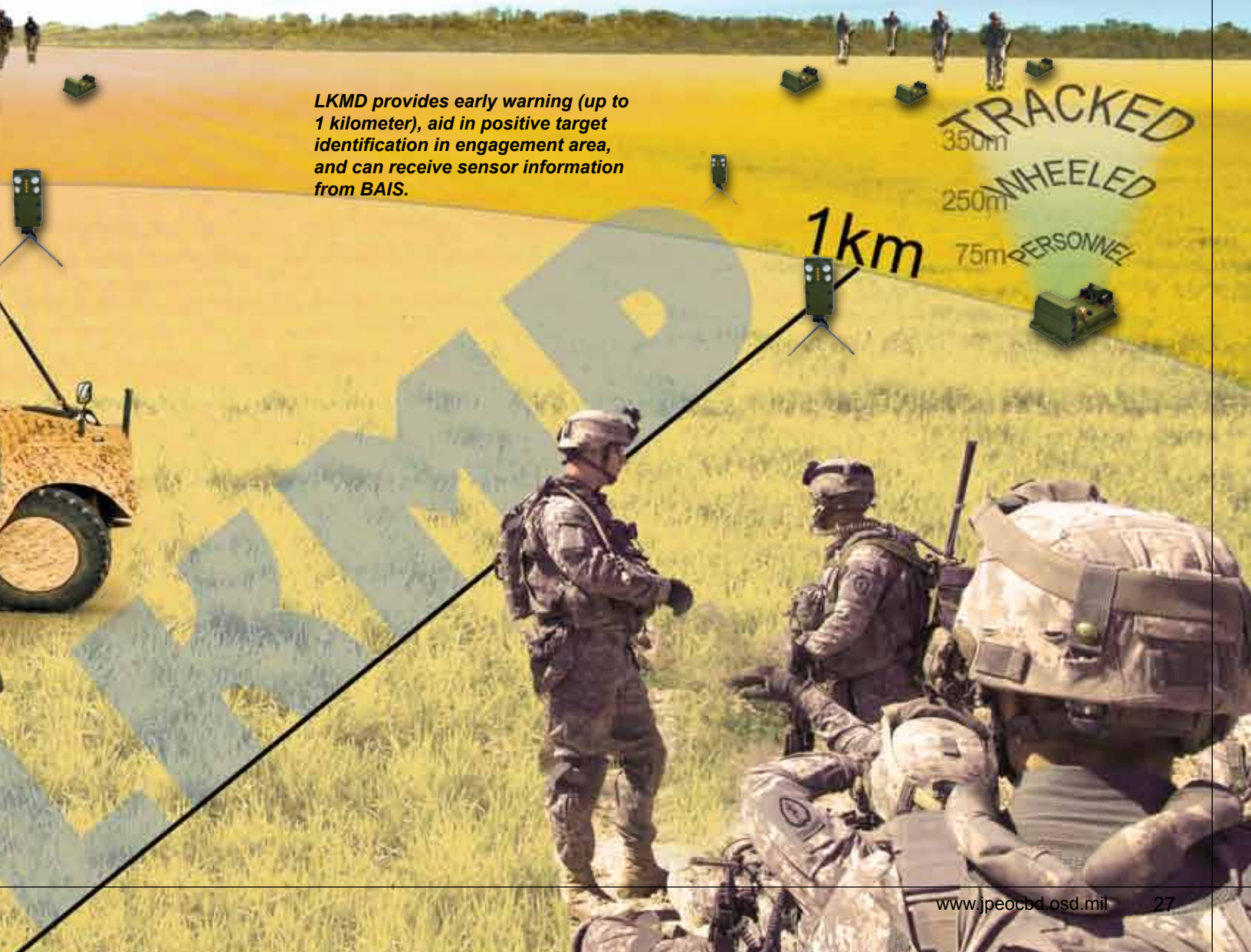

LKMD provides early warning (up to 1 kilometer), aid in positive target identification in engagement area, and can receive sensor information from BAIS.

Early Coll
Evolutiona

By Troy Widgren, SC&T Biological Analyst, and Steve Lusher, Office of the Chief of Staff
Photos by Steve Lusher

It is your average day in New York, the sweet smell of sauerkraut in the air, the honking of cabbies trying to make their way quickly through traffic so they can take on other fares. Down the Avenue of the Americas an average looking panel van with a crew of highly trained individuals rambles along. The majority of them have the scars of past fought battles, both physical and emotional. For this hand-chosen group of men, stopping those that have done them wrong or those that seek to do them wrong is the only option. The computer's display inside their truck shows that they have come across their target.

"What are the sensors telling us it is?" "As far as I can tell, there is a strong radiological source signal coming from the south. The dismounted response team is going to have a really tough time trying to determine where and what it is not to mention having to deal with all private residences down here. Finding enough evidence to narrow the source down for a search warrant is going to be tough…that and the fact that they are still recovering from our last hit which turned out to be your standard interference from a cancer patient….what a waste of time and I'm sure he wasn't pleased being harassed either!"

Current equipment capabilities require on-foot searches to validate a source.

The landscape of chemical and biological defense is on the constant change with new technologies, capabilities, and the rise and fall of political environments both domestic and abroad. As the threat of a weapon of mass destruction attack becomes more challenging, the needs of the Warfighter and of the Nation become greater. How does the Joint Program Executive Office for Chemical and Biological Defense (JPEO-CBD) keep up with the growing threat? And how do we support immediate needs without developing costly, untested, and historically ineffective results?

Research and development of new capabilities takes years to accomplish at a cost of millions to billions of dollars. Rather than starting from scratch, the JPEO-CBD makes use of interagency and industry relationships evaluating their prototype equipment and capabilities to determine if match its needed requirements. In today's budget restricted environment, the JPEO-CBD looks to partners to share the cost and burden of developing and manufacturing products. Industry involvement in accelerating technologies has proven over time to help deliver equipment faster, cheaper,

aboration

ry Results

and effectively better capabilities to the Warfighter and to the Nation in times of need. With commercial equipment, more or less developed for a specific market, the challenge is integrating these prototype capabilities with user needs and operational requirements.

Evolutionary acquisition requires collaboration among the user, tester, and developer. This simple concept has immediate and gratifying results. As the Joint Program Executive Office for Chemical and Biological Defense, our role is to ensure the protection of the Warfighter and the US against Weapons of Mass Destruction (WMD).

"This Administration has no greater responsibility than the safety and security of the American people. And there is no greater threat to the American people than weapons of mass destruction, particularly the danger posed by the pursuit of nuclear weapons by violent extremists and their proliferation to additional states." National Security Strategy (page 4) dated May 2010. The consequences of a WMD attack are grave and far reaching. As technology develops, the potential of an attack grows increasingly more difficult to detect, deter, and protect against. How does a simple concept such as collaboration help improve on the highly technological, multi-operational, rugged and user friendly devices? What does the JPEO-CBD do to ensure that equipment meets capability needs while being useful to the user? Involving the user community early in the process of technology maturation helps to validate these technologies, and the capabilities that they provide. The testing can be intense, both for the user community and for the industry members as equipment is compared and determinations are made on the usefulness, operation, and achievement of the prototype devices. The rewards to industry for sharing are often high valued, multi-year contracts with interagency benefiting from a reduced price per unit cost as well as a partner to share in the logistical burden.

Thorough investigation outside and inside buildings are used to locate and identify radiation sources during baseline exercises.

On March 14, 2011, the rising sun struggled to warm the cold winds that blew through the mock urban terrain built specifically for testing and training. Typical small city structures such as a church, hospital, hotel, police station, and gas station stretched their shadows across the elevated landscape of Fort Indiantown Gap, PA. The resident hawks from the nature reserve were joined by an incoming convoy of National Guard Warfighters, Industry groups, Project Managers, and Evaluators. A-10 Thunderbolts flew nearby in another exercise just starting to unfold. This two week operational exercise was an evaluation of long-range radiological

Members from the 3rd Civil Support Team participate in the Limited User Experiment.

detection in a Limited User Experiment. The setting, an urban environment. The task, to detect, identify and locate radiological sources from a long-range standoff, mobile platform.

Limited User Experiments (LUE), like the one used by DHS's Domestic Nuclear Detection Office in order to find a better radiological material detector, pave the way in allowing the user community to have hands-on experience with the prototype equipment before more time and money is spent on selecting and maturing equipment for production and use. This collaborative effort between the project managers, the industry members, and the user community is one of the most interesting, nail-biting, and important steps in the life of a prototype. When evaluating long-range radiological equipment for current user needs and technology development, the LUE was used to put potential end-users in with the prototype equipment for intensive and unbiased field evaluations.

With the testing environment set, the prototype equipment up and running, and the user community in place, the excitement commenced. Members from the Pennsylvania National Guard (3rd Civil Support Team), the Nassau County police department, and the Pennsylvania State Police out of Philiadelphia, started by developing baseline runs with their unit's organic radiological detection equipment. Each of the groups, in turn, was followed behind by third-party evaluators from John Hopkins Applied Physics Lab in strict paths to detect and validate the hidden radiological sources being found by the users. Following this baseline evaluation, each group began using and evaluating the prototype systems. The two systems chosen to be tested were already narrowed down through a previous lengthy review process. As the user community compared their equipment and capability to that of the prototypes, communication and collaboration was soon a visible mechanism in creating an open, productive, and informative environment to all participants. This collaboration and transparency is one of the key successes to exercises utilizing the process of a Limited User Experiment.

"We've got a hit on the sensors! It is 145M to the Northwest along our current heading, our indicators say that it is a 5.6 Gy Cesium source and the graphic overlay says it is in a second floor apartment on the east side of the alleyway. Call in the interdiction team while I transmit this back to the courthouse so that they can issue our warrant to search the premises."

Equipment used by Civil Support Teams, the Police Department, and the Fire Department are compared against the prototype equipment being tested in the LUE.

Honoring Those Who Serve

Rutherford Brice spent almost 25 years in the armed forces, first in the segregated Navy, where he lucked into a position as an aviation machinist. Then, after attending college, he joined the Army just in time to head off to the Korean War, this time as a commissioned officer. Through tours of duty that took him around the world, including two tours of Vietnam, he broadened his skill set, taking full advantage of every career possibility he was offered. War: World War II, 1939-1946; Korean War, 1950-1955; Vietnam War, 1961-1975

The 3-year-old daughter of Petty Officer 2nd Class Jerome Cinco, a hospital corpsman with Headquarters Battery, 1st Battalion, 12th Marine Regiment, holds her father close before his departure from Marine Corps Base Hawaii on a seven-month deployment to Afghanistan, April 25, 2011.

Lula Barber, Meta Kres, and Brendall, outside welding shop at the Bethlehem-Fairfield Shipyards. Baltimore, Maryland.
War: World War II, 1939-1946

LKMD Motion Sens
F1
F2
1
2
4
5
7
8
0
FOOD TEST
REENING KI
Remote Control Module
ALARM
F2
F3
3
6